CREEK
TECHNICAL SERVICES, LLC

Registry No. 29824
17520 Edinburgh Dr
Tampa, FL 33647
(813) 480-3421

EVALUATION REPORT

FLORIDA BUILDING CODE 8TH EDITION (2023)

Issued October 1, 2023

Manufacturer: DREXEL METALS, INC.
1234 Gardiner Lane
Louisville, KY 40213
(502) 716-7143
www.drexmet.com

Manufacturing: Drexel Metals Association of Regional Manufacturers (DM-ARM)

Quality Assurance: Architectural Testing, Inc. (QUA1844)

SCOPE

Category: Roofing
Subcategory: Roofing Accessories that are an Integral Part of the Roofing System
Code Edition: Florida Building Code, 8th Edition (2023)
Code Sections: 1504.5
Properties: Edge securement for low-slope roofs

REFERENCES

Entity	Report No.	Standard	Year
Farabaugh Engineering and Testing Inc. (TST1654)	T223-14	ANSI/SPRI/FM4435 ES-1	2017
Farabaugh Engineering and Testing Inc. (TST1654)	T224-14	ANSI/SPRI/FM4435 ES-1	2017
Farabaugh Engineering and Testing Inc. (TST1654)	T227-14	ANSI/SPRI/FM4435 ES-1	2017
Farabaugh Engineering and Testing Inc. (TST1654)	T229-14	ANSI/SPRI/FM4435 ES-1	2017
Farabaugh Engineering and Testing Inc. (TST1654)	T233-14	ANSI/SPRI/FM4435 ES-1	2017
Farabaugh Engineering and Testing Inc. (TST1654)	T250-14	ANSI/SPRI/FM4435 ES-1	2017
Farabaugh Engineering and Testing Inc. (TST1654)	T257-14	ANSI/SPRI/FM4435 ES-1	2017
Farabaugh Engineering and Testing Inc. (TST1654)	T258-14	ANSI/SPRI/FM4435 ES-1	2017
Farabaugh Engineering and Testing Inc. (TST1654)	T260-14	ANSI/SPRI/FM4435 ES-1	2017
Farabaugh Engineering and Testing Inc. (TST1654)	T261-14	ANSI/SPRI/FM4435 ES-1	2017
Farabaugh Engineering and Testing Inc. (TST1654)	T262-14	ANSI/SPRI/FM4435 ES-1	2017
Farabaugh Engineering and Testing Inc. (TST1654)	T263-14	ANSI/SPRI/FM4435 ES-1	2017
Farabaugh Engineering and Testing Inc. (TST1654)	T267-14	ANSI/SPRI/FM4435 ES-1	2017
Farabaugh Engineering and Testing Inc. (TST1654)	T268-14	ANSI/SPRI/FM4435 ES-1	2017
Farabaugh Engineering and Testing Inc. (TST1654)	T270-14	ANSI/SPRI/FM4435 ES-1	2017
Farabaugh Engineering and Testing Inc. (TST1654)	T271-14	ANSI/SPRI/FM4435 ES-1	2017
Farabaugh Engineering and Testing Inc. (TST1654)	T272-14	ANSI/SPRI/FM4435 ES-1	2017
Farabaugh Engineering and Testing Inc. (TST1654)	T273-14	ANSI/SPRI/FM4435 ES-1	2017
Farabaugh Engineering and Testing Inc. (TST1654)	T274-14	ANSI/SPRI/FM4435 ES-1	2017
Farabaugh Engineering and Testing Inc. (TST1654)	T275-14	ANSI/SPRI/FM4435 ES-1	2017
Farabaugh Engineering and Testing Inc. (TST1654)	T276-14	ANSI/SPRI/FM4435 ES-1	2017
Farabaugh Engineering and Testing Inc. (TST1654)	T277-14	ANSI/SPRI/FM4435 ES-1	2017
Farabaugh Engineering and Testing Inc. (TST1654)	T281-14	ANSI/SPRI/FM4435 ES-1	2017
Farabaugh Engineering and Testing Inc. (TST1654)	T282-14	ANSI/SPRI/FM4435 ES-1	2017
Farabaugh Engineering and Testing Inc. (TST1654)	T283-14	ANSI/SPRI/FM4435 ES-1	2017
Farabaugh Engineering and Testing Inc. (TST1654)	T284-14	ANSI/SPRI/FM4435 ES-1	2017

This evaluation report is provided for State of Florida product approval under Rule 61G20-3. The manufacturer shall notify CREEK Technical Services, LLC of any product changes or quality assurance changes throughout the duration for which this report is valid. This evaluation report does not express nor imply warranty, installation, recommended use, or other product attributes that are not specifically addressed herein.

Entity	Report No.	Standard	Year
PRI Construction Materials Technologies (TST5878)	DMC-030-02-01	ANSI/SPRI/FM4435 ES-1	2017
PRI Construction Materials Technologies (TST5878)	DMC-030-02-02	ANSI/SPRI/FM4435 ES-1	2017
PRI Construction Materials Technologies (TST5878)	DMC-030-02-03	ANSI/SPRI/FM4435 ES-1	2017
PRI Construction Materials Technologies (TST5878)	DMC-035-02-01	ANSI/SPRI/FM4435 ES-1	2017
PRI Construction Materials Technologies (TST5878)	DMC-040-02-01A	ANSI/SPRI/FM4435 ES-1	2017
PRI Construction Materials Technologies (TST5878)	DMC-040-02-01B	ANSI/SPRI/FM4435 ES-1	2017
PRI Construction Materials Technologies (TST5878)	DMC-040-02-01C	ANSI/SPRI/FM4435 ES-1	2017
PRI Construction Materials Technologies (TST5878)	DMC-041-02-01A	ANSI/SPRI/FM4435 ES-1	2017
PRI Construction Materials Technologies (TST5878)	DMC-041-02-01B	ANSI/SPRI/FM4435 ES-1	2017
PRI Construction Materials Technologies (TST5878)	DMC-041-02-02A	ANSI/SPRI/FM4435 ES-1	2017
PRI Construction Materials Technologies (TST5878)	DMC-041-02-02B	ANSI/SPRI/FM4435 ES-1	2017
PRI Construction Materials Technologies (TST5878)	DMC-041-02-03A	ANSI/SPRI/FM4435 ES-1	2017
PRI Construction Materials Technologies (TST5878)	DMC-041-02-03B	ANSI/SPRI/FM4435 ES-1	2017
PRI Construction Materials Technologies (TST5878)	DMC-041-02-04A	ANSI/SPRI/FM4435 ES-1	2017
PRI Construction Materials Technologies (TST5878)	DMC-041-02-04B	ANSI/SPRI/FM4435 ES-1	2017
PRI Construction Materials Technologies (TST5878)	DMC-041-02-05A	ANSI/SPRI/FM4435 ES-1	2017
PRI Construction Materials Technologies (TST5878)	DMC-041-02-05B	ANSI/SPRI/FM4435 ES-1	2017
PRI Construction Materials Technologies (TST5878)	DMC-041-02-06A	ANSI/SPRI/FM4435 ES-1	2017
PRI Construction Materials Technologies (TST5878)	DMC-041-02-06B	ANSI/SPRI/FM4435 ES-1	2017
PRI Construction Materials Technologies (TST5878)	DMC-041-02-07A	ANSI/SPRI/FM4435 ES-1	2017
PRI Construction Materials Technologies (TST5878)	DMC-041-02-07B	ANSI/SPRI/FM4435 ES-1	2017

This evaluation report is provided for State of Florida product approval under Rule 61G20-3. The manufacturer shall notify CREEK Technical Services, LLC of any product changes or quality assurance changes throughout the duration for which this report is valid. This evaluation report does not express nor imply warranty, installation, recommended use, or other product attributes that are not specifically addressed herein.

APPROVED EDGE METAL SYSTEMS (CLICK TO LINK TO SYSTEM)

24” Coping (Min. 24 ga. Steel) 16
16” Econo-Coping (Min. 24 ga. Steel) 17
24” Econo-Coping LT (Min. 0.040” Aluminum) 18
16” Econo-Coping LT (Min. 0.040” Aluminum) 19
24” Econo-Coping LT (Min. 24 ga. Steel) 20
16” Econo-Coping LT (Min. 24 ga. Steel) 21
24” Spring-Tite Coping EZ (Min. 0.040” Aluminum) 22
16” Spring-Tite Coping EZ (Min. 0.040” Aluminum) 23
24” Spring-Tite Coping EZ (Min. 24 ga. Steel) 24
16” Spring-Tite Coping EZ (Min. 24 ga. Steel) 25
24” Spring-Tite Coping HD (Min. 0.040” Aluminum) 26
16” Spring-Tite Coping HD (Min. 0.040” Aluminum) 27
24” Spring-Tite Coping HD (Min. 24 ga. Steel) 28
16” Spring-Tite Coping HD (Min. 24 ga. Steel) 29
24” Spring-Tite Coping LT (Min. 0.040” Aluminum) 30
16” Spring-Tite Coping LT (Min. 0.040” Aluminum) 31
24” Spring-Tite Coping LT (Min. 24 ga. Steel) 32
16” Spring-Tite Coping LT (Min. 24 ga. Steel) 33
Snap Coping Flex (Min. 0.040” Aluminum) 34
Snap Coping Flex (Min. 24 ga. Steel) 35
Snap Coping Flex-C (Min. 0.040” Aluminum) 36
Snap Coping Flex-C (Min. 24 ga. Steel) 37
Snap Coping Max (Min. 0.040” Aluminum) 38
Snap Coping Max (Min. 24 ga. Steel) 39
Snap Coping Max-C (Min. 0.040” Aluminum) 40
Snap Coping Max-C (Min. 24 ga. Steel) 41
Econo Gravel Stop (Min. 24 ga. Steel) 42
Econo Gravel Stop (Min. 0.032” Aluminum) 43
Drip Edge LT (Min. 0.040” Aluminum) 44
Drip Edge LT (Min. 24 ga. Steel) 45
Fascia Cover EC (Min. 0.032” Aluminum) 46
Fascia Cover EC (Min. 0.040” Aluminum) 47
Fascia Cover EC (Min. 0.050” Aluminum) 48
Fascia Cover EC (Min. 24 ga. Steel) 49
Fascia Cover EC (Min. 22 ga. Steel) 50
Fascia Cover HD (Min. 0.040” Aluminum) 51
Fascia Cover HD (Min. 24 ga. Steel) 52
Fascia Cover LT (Min. 0.040” Aluminum) 53
Fascia Cover LT (Min. 24 ga. Steel) 54
Snap Gravel Stop HD (Min. 0.040” Aluminum) 55
Snap Gravel Stop HD (Min. 24 ga. Steel) 56
Snap Gravel Stop LT (Min. 0.040” Aluminum) 57
Snap Gravel Stop LT (Min. 24 ga. Steel) 58

This evaluation report is provided for State of Florida product approval under Rule 61G20-3. The manufacturer shall notify CREEK Technical Services, LLC of any product changes or quality assurance changes throughout the duration for which this report is valid. This evaluation report does not express nor imply warranty, installation, recommended use, or other product attributes that are not specifically addressed herein.

PRODUCT DESCRIPTIONS

Product: **Coping Flashing**
Description: Metal coping; Max. 24-inch width
Material: Min. 24 ga. (F_y = min. 50 ksi) aluminum zinc coated steel (Min. ASTM A792 AZ50); Shall conform with FBC Table 1503.2

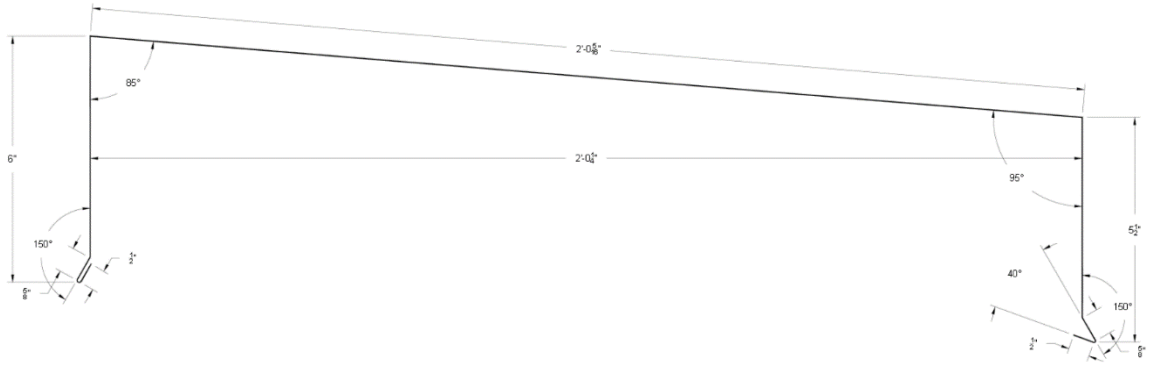

Product: **Coping Cleat**
Description: Continuous metal cleat
Material: Min. 20 ga. steel (Min. ASTM A653 G90, CS Type B); Shall conform with FBC Table 1503.2

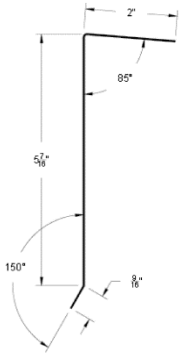

Product: **Econo-Coping and Econo-Coping LT Flashing**
Description: Metal coping; Max. 24-inch width
Material: Min. 24 ga. (F_y = min. 50 ksi) aluminum zinc coated steel (Min. ASTM A792 AZ50) or Min. 0.040-inch aluminum (F_y = min. 20 ksi); Shall conform with FBC Table 1503.2

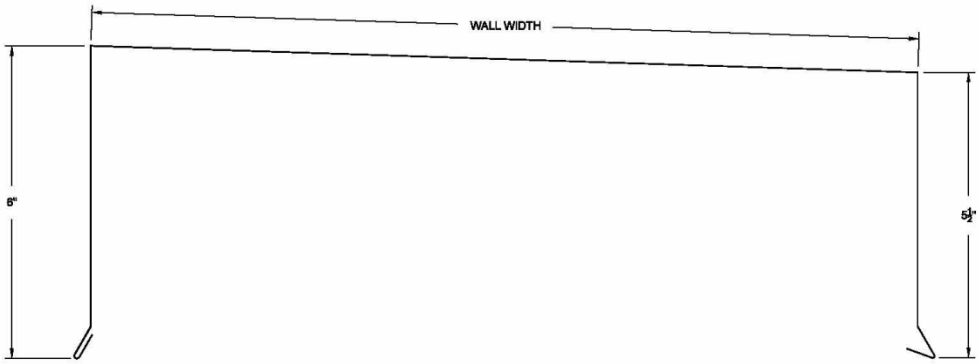

This evaluation report is provided for State of Florida product approval under Rule 61G20-3. The manufacturer shall notify CREEK Technical Services, LLC of any product changes or quality assurance changes throughout the duration for which this report is valid. This evaluation report does not express nor imply warranty, installation, recommended use, or other product attributes that are not specifically addressed herein.

Product: **Econo-Coping Cleat**
Description: Continuous metal cleat
Material: Min. 22 ga. steel (Min. ASTM A653 G90; F_y = min. 50 ksi); Shall conform with FBC Table 1503.2

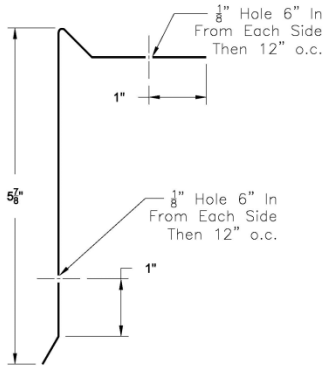

Product: **Econo-Coping LT Cleat**
Description: Continuous metal cleat
Material: Min. 24 ga. steel (Min. ASTM A792 AZ50 or ASTM A653 G90; F_y = min. 50 ksi); Shall conform with FBC Table 1503.2

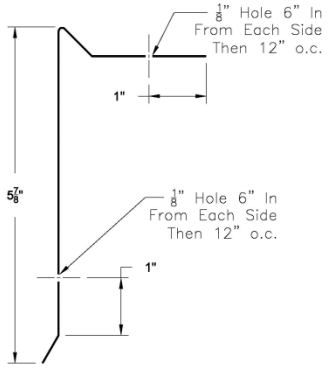

Product: **Spring-Tite Coping EZ Flashing**
Description: Metal coping; Max. 25-inch width; Max. 24-inch wall width
Material: Min. 24 ga. (F_y = min. 50 ksi) aluminum zinc coated steel (Min. ASTM A792 AZ50) or Min. 0.040-inch aluminum (F_y = min. 20 ksi); Shall conform with FBC Table 1503.2

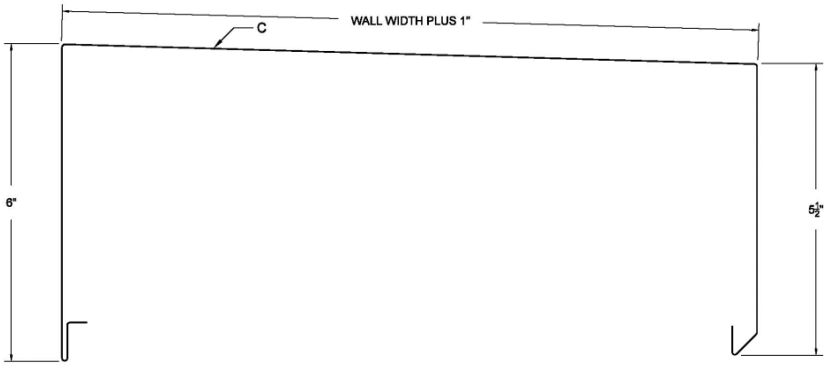

This evaluation report is provided for State of Florida product approval under Rule 61G20-3. The manufacturer shall notify CREEK Technical Services, LLC of any product changes or quality assurance changes throughout the duration for which this report is valid. This evaluation report does not express nor imply warranty, installation, recommended use, or other product attributes that are not specifically addressed herein.

Product: **Spring-Tite Coping EZ "V"-Cleat**
Description: Metal cleat; 12-inch length
Material: Min. 16 ga. steel (Min. ASTM A792 AZ50 or ASTM A653 G90); F_y = min. 40 ksi; Shall conform with FBC Table 1503.2

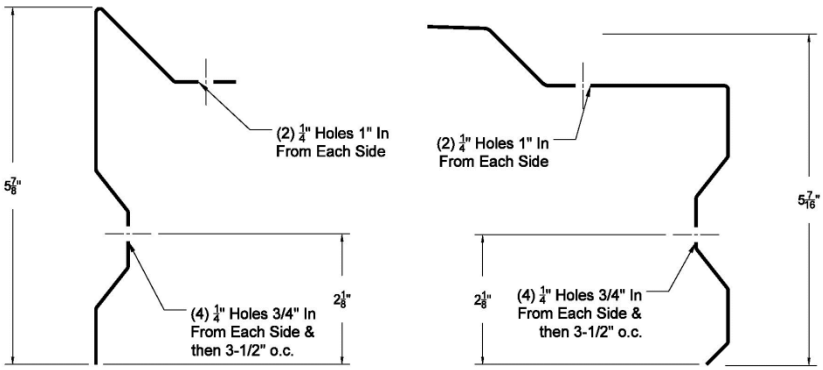

Product: **Spring-Tite Coping LT Flashing**
Description: Metal coping; Max. 25-inch width; Max. 24-inch wall width
Material: Min. 24 ga. (F_y = min. 50 ksi) aluminum zinc coated steel (Min. ASTM A792 AZ50) or Min. 0.040-inch aluminum (F_y = min. 20 ksi); Shall conform with FBC Table 1503.2

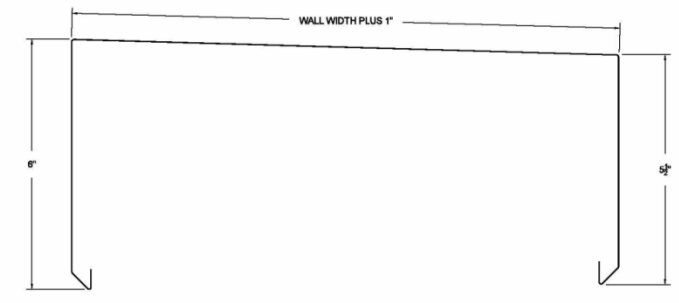

Product: **Spring-Tite Coping LT "V"-Cleat**
Description: Metal cleat; 12-inch length
Material: Min. 18 ga. steel (Min. ASTM A792 AZ50 or ASTM A653 G90); F_y = min. 40 ksi; Shall conform with FBC Table 1503.2

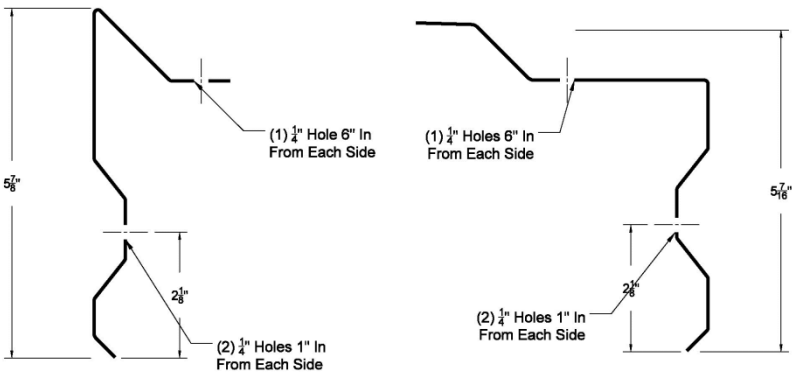

This evaluation report is provided for State of Florida product approval under Rule 61G20-3. The manufacturer shall notify CREEK Technical Services, LLC of any product changes or quality assurance changes throughout the duration for which this report is valid. This evaluation report does not express nor imply warranty, installation, recommended use, or other product attributes that are not specifically addressed herein.

Product: **Coping Spring**
Description: Metal spring
Material: Min. 22 ga. steel (Min. ASTM A792 AZ50 or ASTM A653 G90); F_y = min. 40 ksi; Shall conform with FBC Table 1503.2

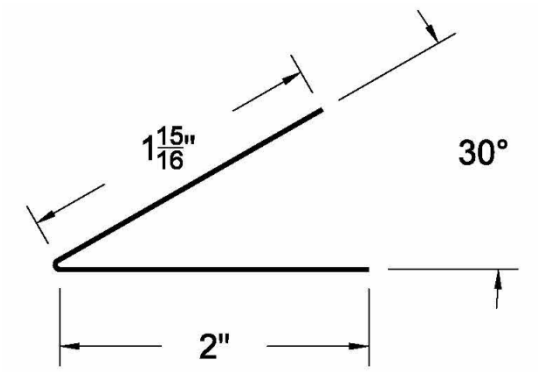

Product: **Spring-Tite Coping HD Flashing**
Description: Metal coping; Max. 25-inch width; Max. 24-inch wall width
Material: Min. 24 ga. (F_y = min. 50 ksi) aluminum zinc coated steel (Min. ASTM A792 AZ50) or Min. 0.040-inch aluminum (F_y = min. 20 ksi); Shall conform with FBC Table 1503.2

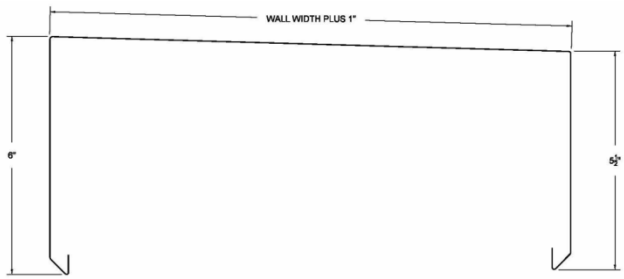

Product: **Spring-Tite Coping HD "V"-Cleat**
Description: Metal cleat; 12-inch length
Material: Min. 16 ga. steel (Min. ASTM A792 AZ50 or ASTM A653 G90); F_y = min. 40 ksi; Shall conform with FBC Table 1503.2

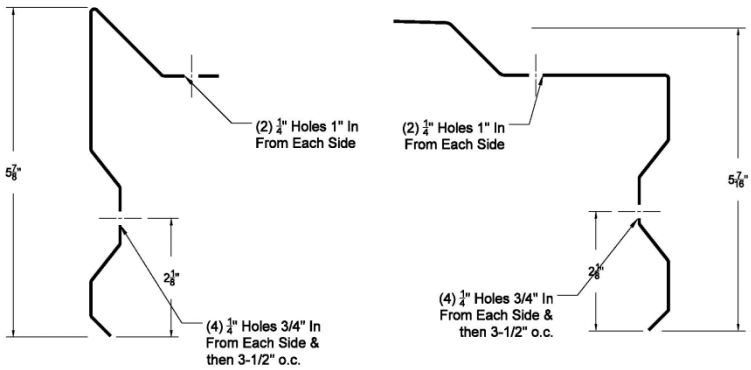

This evaluation report is provided for State of Florida product approval under Rule 61G20-3. The manufacturer shall notify CREEK Technical Services, LLC of any product changes or quality assurance changes throughout the duration for which this report is valid. This evaluation report does not express nor imply warranty, installation, recommended use, or other product attributes that are not specifically addressed herein.

Product: **Snap Coping Flex Flashing**
Description: Metal coping; Max. 24-inch width; Max. 24-inch wall width
Material: Min. 24 ga. (F_y = min. 50 ksi) aluminum zinc coated steel (Min. ASTM A792 AZ50) or Min. 0.040-inch aluminum (F_y = min. 24 ksi); Shall conform with FBC Table 1503.2

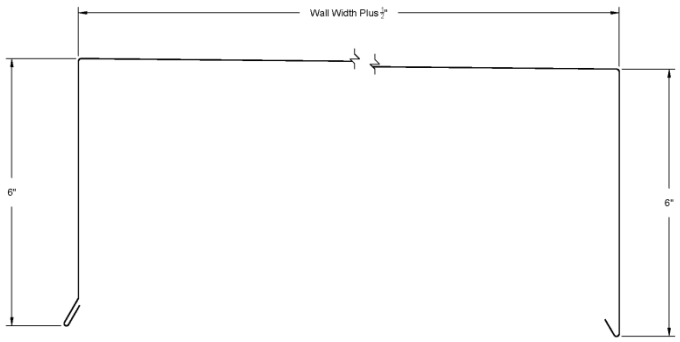

Product: **Snap Coping Flex Cleat**
Description: Metal cleat; 12-inch length
Material: Min. 20 ga. steel (Min. ASTM A792 AZ50 or ASTM A653 G90); F_y = min. 50 ksi; Shall conform with FBC Table 1503.2

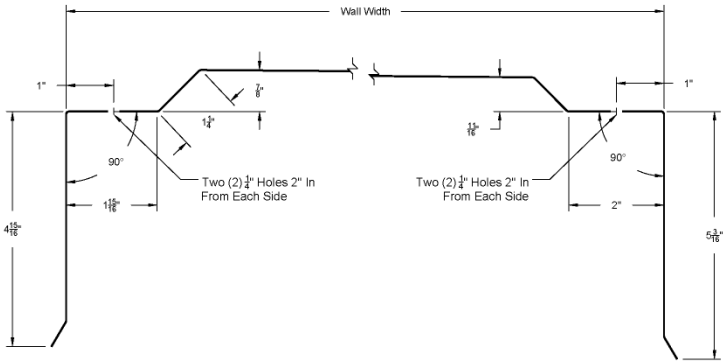

Product: **Snap Coping Flex-C Cleat**
Description: Metal cleat; 12-inch length
Material: Min. 20 ga. steel (Min. ASTM A792 AZ50 or ASTM A653 G90); F_y = min. 40 ksi; Shall conform with FBC Table 1503.2

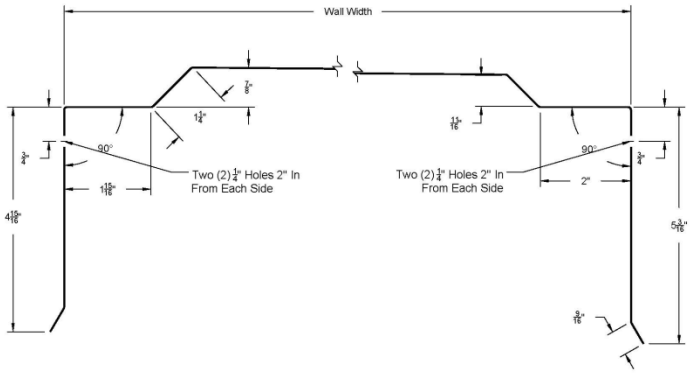

This evaluation report is provided for State of Florida product approval under Rule 61G20-3. The manufacturer shall notify CREEK Technical Services, LLC of any product changes or quality assurance changes throughout the duration for which this report is valid. This evaluation report does not express nor imply warranty, installation, recommended use, or other product attributes that are not specifically addressed herein.

Product: **Snap Coping Max Flashing**
Description: Metal coping; Max. 32-inch width; Max. 32-inch wall width
Material: Min. 24 ga. (F_y = min. 50 ksi) aluminum zinc coated steel (Min. ASTM A792 AZ50) or Min. 0.040-inch aluminum (F_y = min. 24 ksi); Shall conform with FBC Table 1503.2

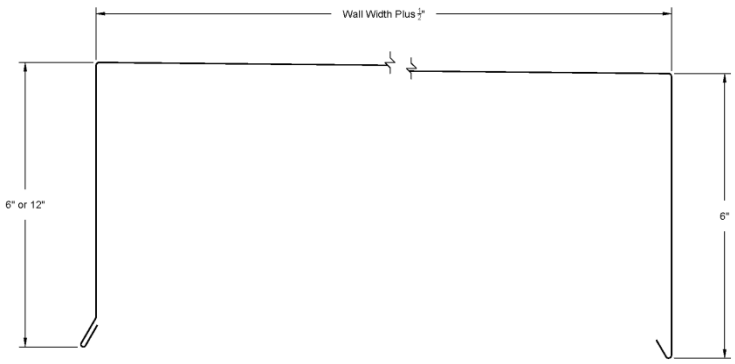

Product: **Snap Coping Max Cleat**
Description: Metal cleat; 12-inch length
Material: Min. 16 ga. steel (Min. ASTM A792 AZ50 or ASTM A653 G90); F_y = min. 40 ksi; Shall conform with FBC Table 1503.2

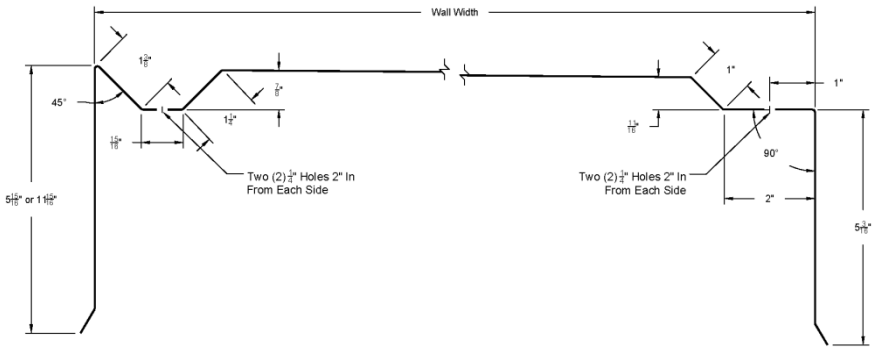

Product: **Snap Coping Max-C Cleat**
Description: Metal cleat; 12-inch length
Material: Min. 16 ga. steel (Min. ASTM A792 AZ50 or ASTM A653 G90); F_y = min. 40 ksi; Shall conform with FBC Table 1503.2

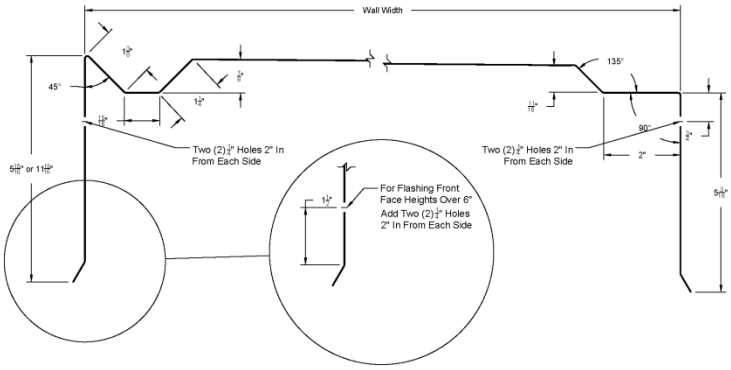

This evaluation report is provided for State of Florida product approval under Rule 61G20-3. The manufacturer shall notify CREEK Technical Services, LLC of any product changes or quality assurance changes throughout the duration for which this report is valid. This evaluation report does not express nor imply warranty, installation, recommended use, or other product attributes that are not specifically addressed herein.

Product: **Econo Gravel Stop Flashing**
Description: Metal drip edge
Material: Min. 24 ga. (F_y = min. 50 ksi) aluminum zinc coated steel (Min. ASTM A792 AZ50) or Min. 0.032-inch aluminum (F_y = min. 20 ksi); Shall conform with FBC Table 1503.2

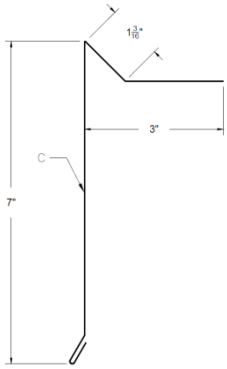

Product: **Econo Gravel Stop Cleat**
Description: Metal drip edge
Material: Min. 24 ga. (F_y = min. 50 ksi) aluminum zinc coated steel (Min. ASTM A792 AZ50); Shall conform with FBC Table 1503.2

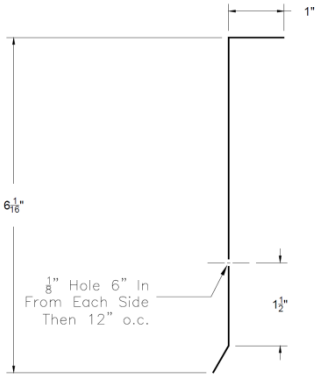

Product: **Drip Edge LT Flashing**
Description: Metal drip edge
Material: Min. 24 ga. (F_y = min. 50 ksi) aluminum zinc coated steel (Min. ASTM A792 AZ50) or Min. 0.040-inch aluminum (F_y = min. 20 ksi); Shall conform with FBC Table 1503.2

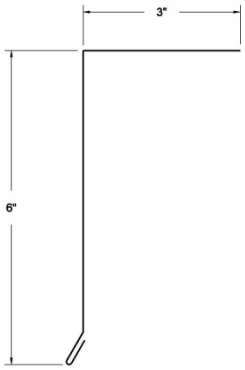

This evaluation report is provided for State of Florida product approval under Rule 61G20-3. The manufacturer shall notify CREEK Technical Services, LLC of any product changes or quality assurance changes throughout the duration for which this report is valid. This evaluation report does not express nor imply warranty, installation, recommended use, or other product attributes that are not specifically addressed herein.

Profile: **Drip Edge LT Cleat**
Description: Continuous metal cleat
Material: Min. 24 ga. steel (Min. ASTM A792 AZ50 or ASTM A653 G90); F_y = min. 50 ksi; Shall conform with FBC Table 1503.2

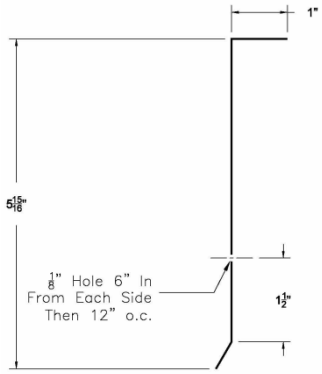

Product: **Fascia Cover EC Flashing**
Description: Metal edge flashing
Material: 8-1/2" Face Height:
Min. 24 ga. (F_y = min. 50 ksi) aluminum zinc coated steel (Min. ASTM A792 AZ50) or Min. 0.032-inch aluminum (F_y = min. 25 ksi) or min. 0.040-inch aluminum (F_y = min. 22 ksi)
11-1/2" Face Height:
Min. 22 ga. (F_y = min. 50 ksi) aluminum zinc coated steel (Min. ASTM A792 AZ50) or Min. 0.050-inch aluminum (F_y = min. 18 ksi)
Shall conform with FBC Table 1503.2

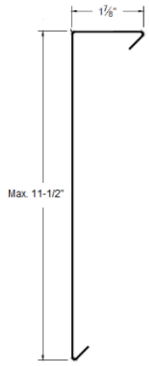

This evaluation report is provided for State of Florida product approval under Rule 61G20-3. The manufacturer shall notify CREEK Technical Services, LLC of any product changes or quality assurance changes throughout the duration for which this report is valid. This evaluation report does not express nor imply warranty, installation, recommended use, or other product attributes that are not specifically addressed herein.

Product: **Fascia Cover EC Extruded Cleat**
Description: Continuous metal cleat
Material: Extruded 1/8" thick 6063 aluminum alloy

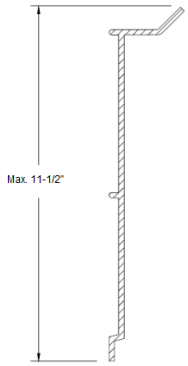

Product: **Fascia Cover HD Flashing**
Description: Metal edge flashing
Material: Min. 24 ga. (F_y = min. 60 ksi) aluminum zinc coated steel (Min. ASTM A792 AZ50) or Min. 0.040-inch aluminum (F_y = min. 20 ksi); Shall conform with FBC Table 1503.2

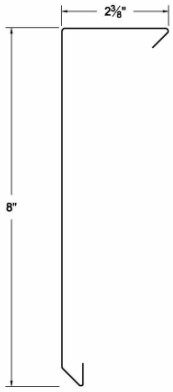

Product: **Fascia Cover HD Cleat**
Description: Continuous metal cleat
Material: Min. 20 ga. steel (Min. ASTM A792 AZ50 or ASTM A653 G90); F_y = min. 50 ksi; Shall conform with FBC Table 1503.2

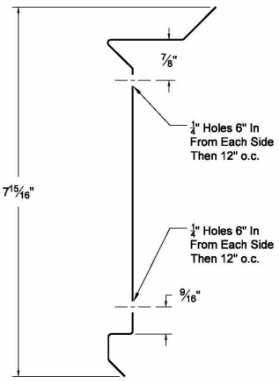

This evaluation report is provided for State of Florida product approval under Rule 61G20-3. The manufacturer shall notify CREEK Technical Services, LLC of any product changes or quality assurance changes throughout the duration for which this report is valid. This evaluation report does not express nor imply warranty, installation, recommended use, or other product attributes that are not specifically addressed herein.

Product: **Fascia Cover LT Flashing**
Description: Metal edge flashing
Material: Min. 24 ga. (F_y = min. 60 ksi) aluminum zinc coated steel (Min. ASTM A792 AZ50) or Min. 0.040-inch aluminum (F_y = min. 20 ksi); Shall conform with FBC Table 1503.2

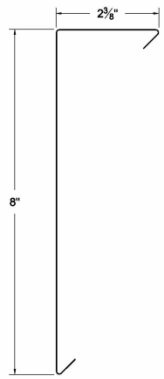

Product: **Fascia Cover LT Cleat**
Description: Continuous metal cleat
Material: Min. 22 ga. steel (Min. ASTM A792 AZ50 or ASTM A653 G90); F_y = min. 40 ksi; Shall conform with FBC Table 1503.2

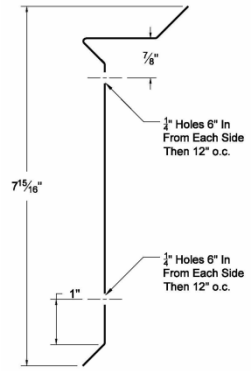

Product: **Snap Gravel Stop HD Flashing**
Description: Metal drip edge and gravel stop
Material: Min. 24 ga. (F_y = min. 40 ksi) aluminum zinc coated steel (Min. ASTM A792 AZ50) or Min. 0.040-inch aluminum (F_y = min. 20 ksi); Shall conform with FBC Table 1503.2

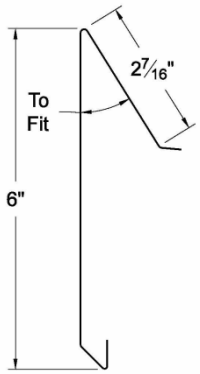

This evaluation report is provided for State of Florida product approval under Rule 61G20-3. The manufacturer shall notify CREEK Technical Services, LLC of any product changes or quality assurance changes throughout the duration for which this report is valid. This evaluation report does not express nor imply warranty, installation, recommended use, or other product attributes that are not specifically addressed herein.

Product: **Snap Gravel Stop HD Cleat**
Description: Continuous metal cleat
Material: Min. 22 ga. steel (Min. ASTM A792 AZ50 or ASTM A653 G90); F_y = min. 40 ksi; Shall conform with FBC Table 1503.2

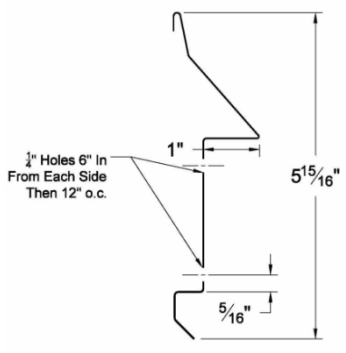

Product: **Spring Stop**
Description: Continuous metal cleat
Material: Min. 22 ga. steel (Min. ASTM A792 AZ50 or ASTM A653 G90); F_y = min. 40 ksi; Shall conform with FBC Table 1503.2

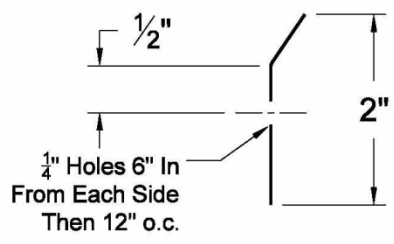

Product: **Snap Gravel Stop LT Flashing**
Description: Metal drip edge and gravel stop
Material: Min. 24 ga. (F_y = min. 50 ksi) aluminum zinc coated steel (Min. ASTM A792 AZ50) or Min. 0.040-inch aluminum (F_y = min. 20 ksi); Shall conform with FBC Table 1503.2

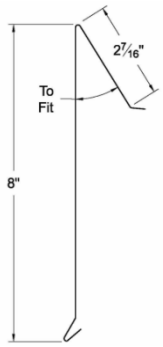

This evaluation report is provided for State of Florida product approval under Rule 61G20-3. The manufacturer shall notify CREEK Technical Services, LLC of any product changes or quality assurance changes throughout the duration for which this report is valid. This evaluation report does not express nor imply warranty, installation, recommended use, or other product attributes that are not specifically addressed herein.

Product: **Snap Gravel Stop LT Cleat**
Description: Continuous metal cleat
Material: Min. 24 ga. steel (Min. ASTM A792 AZ50 or ASTM A653 G90); F_y = min. 50 ksi; Shall conform with FBC Table 1503.2

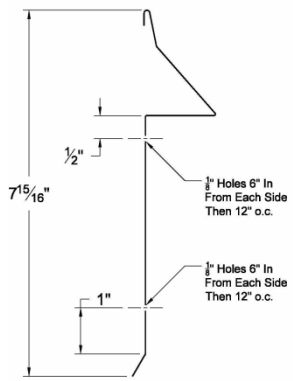

This evaluation report is provided for State of Florida product approval under Rule 61G20-3. The manufacturer shall notify CREEK Technical Services, LLC of any product changes or quality assurance changes throughout the duration for which this report is valid. This evaluation report does not express nor imply warranty, installation, recommended use, or other product attributes that are not specifically addressed herein.

24" Coping (Min. 24 ga. Steel)	
Substrate:	Min. No. 2 SPF wood lumber; Alternate substrates shall be evaluated by a licensed design professional.
Coping System:	Components shall be installed as shown below. The maximum parapet wall width shall be 24-inches. The maximum fastener spacing shall be 12-inch o.c.
Maximum Design Pressures (*Pressure calculated using 2:1 margin of safety per 1504.9*)	
Horizontal load on front leg:	**-54 psf**
Vertical load on top leg:	**-90 psf**
Horizontal load on back leg:	**-54 psf**

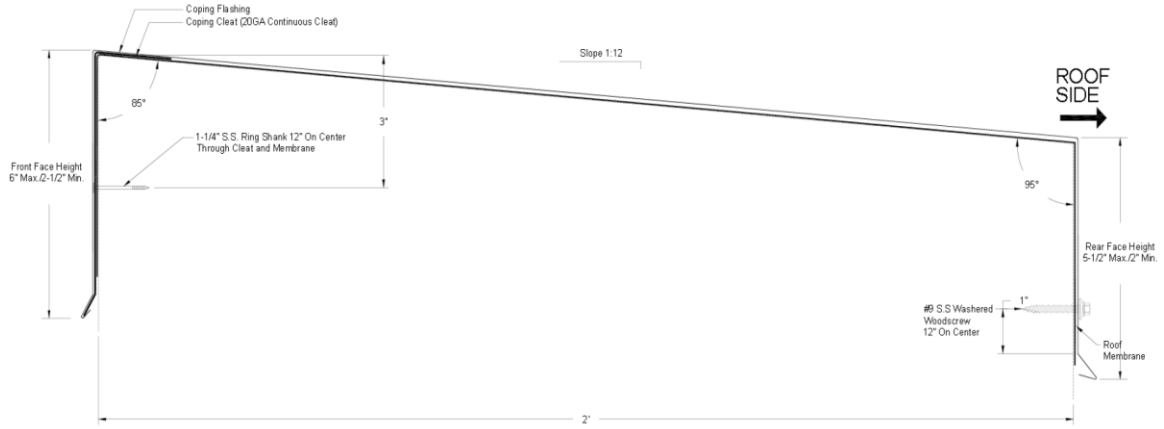

Maximum Parapet Heights for Flat Roofs
Slopes ≤ 1.4:12

Exposure	Basic Wind Speed (mph)								
	110	120	130	140	150	160	170	180	190
Perimeter - Zone 2/Zone 4									
B	60 ft	60 ft	56 ft	33 ft	20 ft	NA	NA	NA	NA
C	60 ft	30 ft	NA	NA	NA	NA	NA	NA	NA
D	31 ft	NA	NA	NA	NA	NA	NA	NA	NA
Corner - Zone 3/Zone 5									
B	60 ft	33 ft	19 ft	NA	NA	NA	NA	NA	NA
C	15 ft	NA	NA	NA	NA	NA	NA	NA	NA
D	NA	NA	NA	NA	NA	NA	NA	NA	NA

Notes: 1) Exposure category for the structure location shall be as defined in the Florida Building Code 2) Limitations are based on the exposed area of 10ft^2 or less 3) Topographic factors such as escarpments or hills are not included in the above assessment 4) Applicable for Enclosed Buildings without overhangs 5) NA = "Not Allowed" 6) K_d = 1.00; K_e = 1.00 7) Projects with parapet heights greater than 60 ft shall be evaluated by a licensed design professional 8) V_{ult} is shown in the above table. Design pressures are calculated using $V_{asd} = V_{ult}\sqrt{0.6}$ per 1609.3.1.

This evaluation report is provided for State of Florida product approval under Rule 61G20-3. The manufacturer shall notify CREEK Technical Services, LLC of any product changes or quality assurance changes throughout the duration for which this report is valid. This evaluation report does not express nor imply warranty, installation, recommended use, or other product attributes that are not specifically addressed herein.

16" Econo-Coping (Min. 24 ga. Steel)	
Substrate:	Min. No. 2 SPF wood lumber; Alternate substrates shall be evaluated by a licensed design professional.
Coping System:	Components shall be installed as shown below. The maximum parapet wall width shall be 16-inches. The maximum fastener spacing shall be 12-inch o.c.
Maximum Design Pressures (*Pressure calculated using 2:1 margin of safety per 1504.9*)	
Horizontal load on front leg:	**-88.5 psf**
Vertical load on top leg:	**-145 psf**
Horizontal load on back leg:	**-88.5 psf**

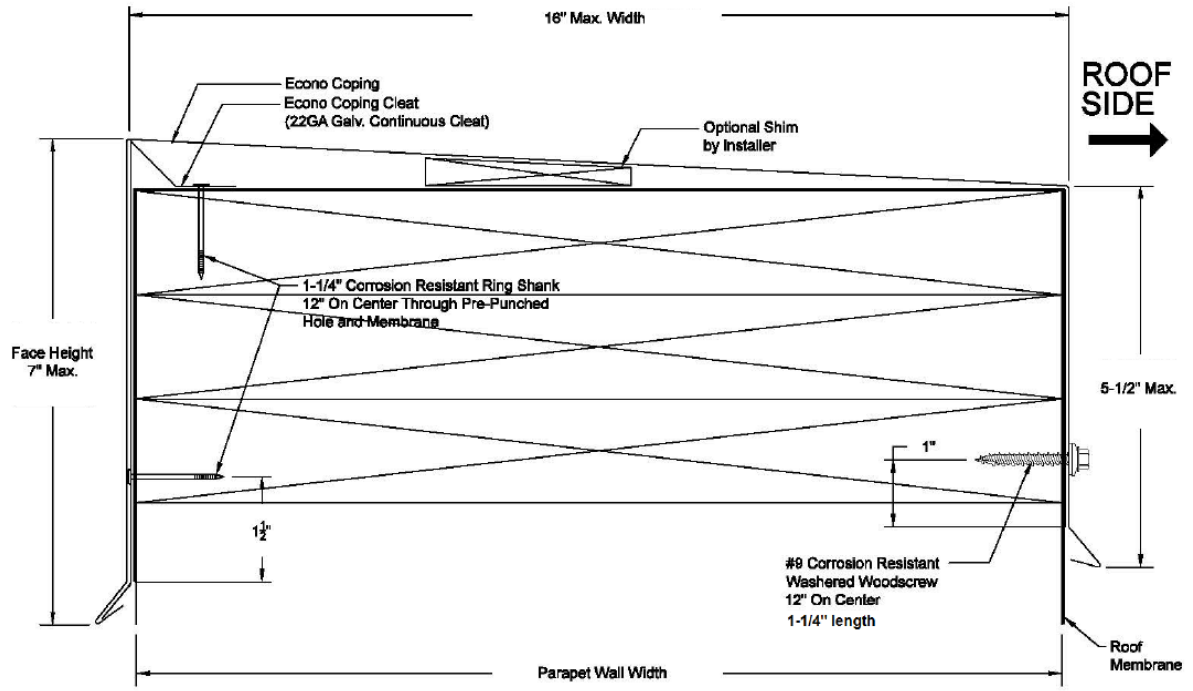

Maximum Parapet Heights for Flat Roofs
Slopes ≤ 1.4:12

Exposure	Basic Wind Speed (mph)								
	110	120	130	140	150	160	170	180	190
Perimeter - Zone 2/Zone 4									
B	60 ft	60 ft	60 ft	60 ft	60 ft	60 ft	48 ft	32 ft	22 ft
C	60 ft	60 ft	60 ft	60 ft	38 ft	20 ft	NA	NA	NA
D	60 ft	60 ft	60 ft	33 ft	15 ft	NA	NA	NA	NA
Corner - Zone 3/Zone 5									
B	60 ft	60 ft	60 ft	60 ft	39 ft	25 ft	16 ft	NA	NA
C	60 ft	60 ft	34 ft	16 ft	NA	NA	NA	NA	NA
D	60 ft	33 ft	NA	NA	NA	NA	NA	NA	NA

Notes: 1) Exposure category for the structure location shall be as defined in the Florida Building Code 2) Limitations are based on the exposed area of $10ft^2$ or less 3) Topographic factors such as escarpments or hills are not included in the above assessment 4) Applicable for Enclosed Buildings without overhangs 5) NA = "Not Allowed" 6) K_d = 1.00; K_e = 1.00 7) Projects with parapet heights greater than 60 ft shall be evaluated by a licensed design professional 8) V_{ult} is shown in the above table. Design pressures are calculated using $V_{asd} = V_{ult}\sqrt{0.6}$ per 1609.3.1.

This evaluation report is provided for State of Florida product approval under Rule 61G20-3. The manufacturer shall notify CREEK Technical Services, LLC of any product changes or quality assurance changes throughout the duration for which this report is valid. This evaluation report does not express nor imply warranty, installation, recommended use, or other product attributes that are not specifically addressed herein.

24" Econo-Coping LT (Min. 0.040" Aluminum)	
Substrate:	Min. No. 2 SPF wood lumber; Alternate substrates shall be evaluated by a licensed design professional.
Coping System:	Components shall be installed as shown below. The maximum parapet wall width shall be 24-inches. The maximum fastener spacing shall be 12-inch o.c.
Maximum Design Pressures (*Pressure calculated using 2:1 margin of safety per 1504.9*)	
Horizontal load on front leg:	**-33.6 psf**
Vertical load on top leg:	**-55 psf**
Horizontal load on back leg:	**-33.6 psf**

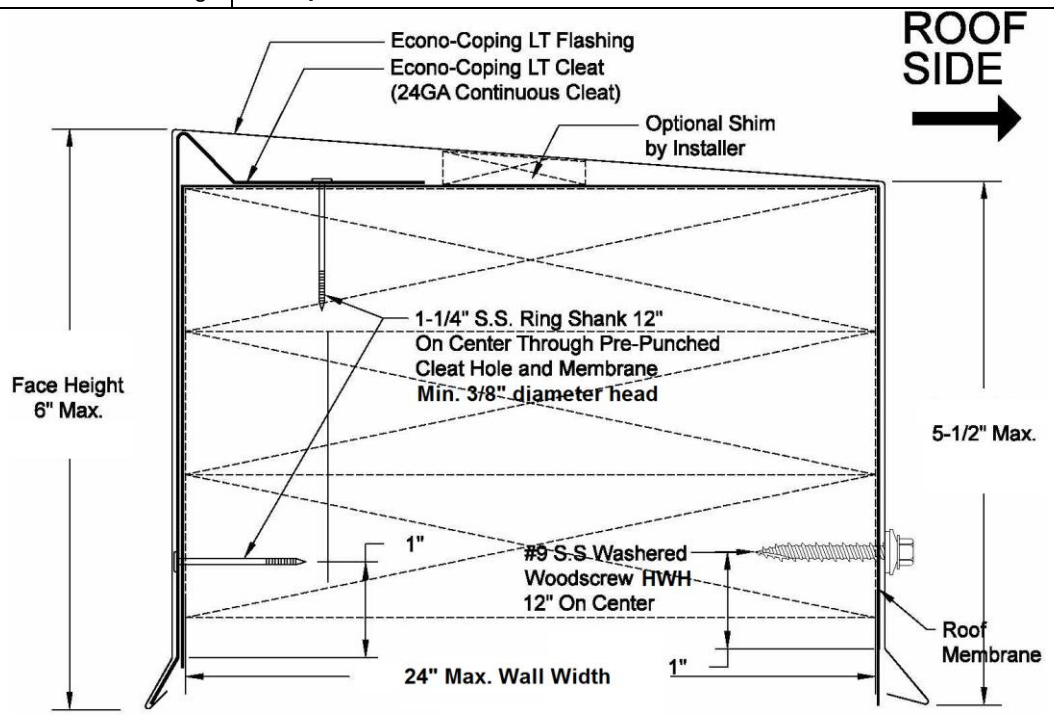

Maximum Parapet Heights for Flat Roofs
Slopes ≤ 1.4:12

Exposure	Basic Wind Speed (mph)								
	105	110	115	120	125	130	140	150	160
Perimeter - Zone 2/Zone 4									
B	47 ft	34 ft	25 ft	18 ft	NA	NA	NA	NA	NA
C	NA	NA	NA	NA	NA	NA	NA	NA	NA
D	NA	NA	NA	NA	NA	NA	NA	NA	NA
Corner - Zone 3/Zone 5									
B	16 ft	NA	NA	NA	NA	NA	NA	NA	NA
C	NA	NA	NA	NA	NA	NA	NA	NA	NA
D	NA	NA	NA	NA	NA	NA	NA	NA	NA

Notes: 1) Exposure category for the structure location shall be as defined in the Florida Building Code 2) Limitations are based on the exposed area of 10ft^2 or less 3) Topographic factors such as escarpments or hills are not included in the above assessment 4) Applicable for Enclosed Buildings without overhangs 5) NA = "Not Allowed" 6) K_d = 1.00; K_e = 1.00 7) Projects with parapet heights greater than 60 ft shall be evaluated by a licensed design professional 8) V_{ult} is shown in the above table. Design pressures are calculated using $V_{asd} = V_{ult}\sqrt{0.6}$ per 1609.3.1.

This evaluation report is provided for State of Florida product approval under Rule 61G20-3. The manufacturer shall notify CREEK Technical Services, LLC of any product changes or quality assurance changes throughout the duration for which this report is valid. This evaluation report does not express nor imply warranty, installation, recommended use, or other product attributes that are not specifically addressed herein.

16" Econo-Coping LT (Min. 0.040" Aluminum)	
Substrate:	Min. No. 2 SPF wood lumber; Alternate substrates shall be evaluated by a licensed design professional.
Coping System:	Components shall be installed as shown below. The maximum parapet wall width shall be 16-inches. The maximum fastener spacing shall be 12-inch o.c.
Maximum Design Pressures (*Pressure calculated using 2:1 margin of safety per 1504.9*)	
Horizontal load on front leg:	**-73.3 psf**
Vertical load on top leg:	**-120 psf**
Horizontal load on back leg:	**-73.3 psf**

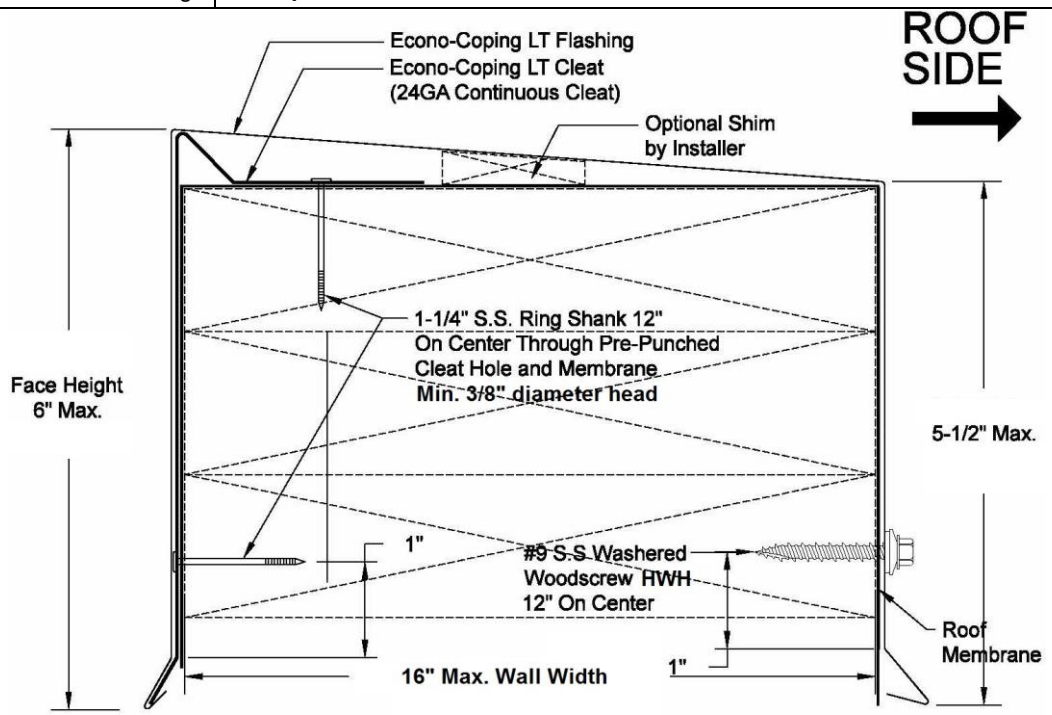

Maximum Parapet Heights for Flat Roofs
Slopes ≤ 1.4:12

Exposure	Basic Wind Speed (mph)								
	110	120	130	140	150	160	170	180	190
Perimeter - Zone 2/Zone 4									
B	60 ft	60 ft	60 ft	60 ft	60 ft	38 ft	25 ft	16 ft	NA
C	60 ft	60 ft	60 ft	30 ft	15 ft	NA	NA	NA	NA
D	60 ft	60 ft	26 ft	NA	NA	NA	NA	NA	NA
Corner - Zone 3/Zone 5									
B	60 ft	60 ft	55 ft	33 ft	20 ft	NA	NA	NA	NA
C	60 ft	29 ft	NA	NA	NA	NA	NA	NA	NA
D	30 ft	NA	NA	NA	NA	NA	NA	NA	NA

Notes: 1) Exposure category for the structure location shall be as defined in the Florida Building Code 2) Limitations are based on the exposed area of $10ft^2$ or less 3) Topographic factors such as escarpments or hills are not included in the above assessment 4) Applicable for Enclosed Buildings without overhangs 5) NA = "Not Allowed" 6) K_d = 1.00; K_e = 1.00 7) Projects with parapet heights greater than 60 ft shall be evaluated by a licensed design professional 8) V_{ult} is shown in the above table. Design pressures are calculated using $V_{asd} = V_{ult}\sqrt{0.6}$ per 1609.3.1.

This evaluation report is provided for State of Florida product approval under Rule 61G20-3. The manufacturer shall notify CREEK Technical Services, LLC of any product changes or quality assurance changes throughout the duration for which this report is valid. This evaluation report does not express nor imply warranty, installation, recommended use, or other product attributes that are not specifically addressed herein.

24" Econo-Coping LT (Min. 24 ga. Steel)	
Substrate:	Min. No. 2 SPF wood lumber; Alternate substrates shall be evaluated by a licensed design professional.
Coping System:	Components shall be installed as shown below. The maximum parapet wall width shall be 24-inches. The maximum fastener spacing shall be 12-inch o.c.
Maximum Design Pressures (*Pressure calculated using 2:1 margin of safety per 1504.9*)	
Horizontal load on front leg:	**-39.7 psf**
Vertical load on top leg:	**-65 psf**
Horizontal load on back leg:	**-39.7 psf**

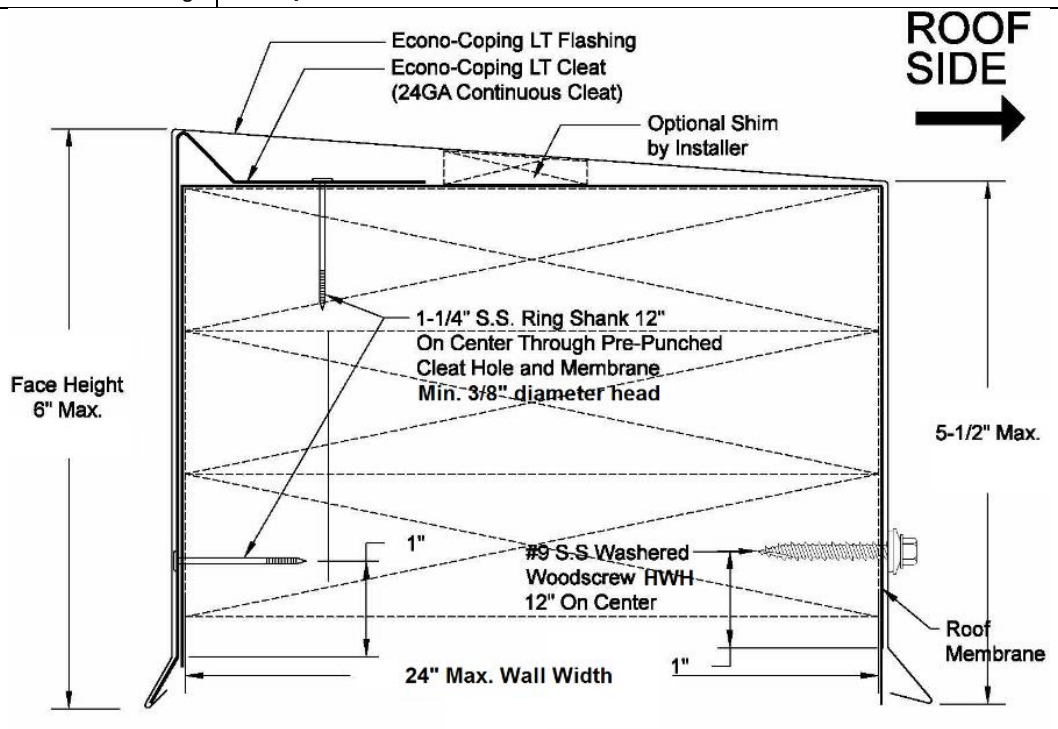

Maximum Parapet Heights for Flat Roofs
Slopes ≤ 1.4:12

Exposure	Basic Wind Speed (mph)								
	105	110	115	120	125	130	140	150	160
Perimeter - Zone 2/Zone 4									
B	60 ft	60 ft	45 ft	33 ft	25 ft	19 ft	NA	NA	NA
C	25 ft	16 ft	NA	NA	NA	NA	NA	NA	NA
D	NA	NA	NA	NA	NA	NA	NA	NA	NA
Corner - Zone 3/Zone 5									
B	29 ft	21 ft	15 ft	NA	NA	NA	NA	NA	NA
C	NA	NA	NA	NA	NA	NA	NA	NA	NA
D	NA	NA	NA	NA	NA	NA	NA	NA	NA

Notes: 1) Exposure category for the structure location shall be as defined in the Florida Building Code 2) Limitations are based on the exposed area of $10ft^2$ or less 3) Topographic factors such as escarpments or hills are not included in the above assessment 4) Applicable for Enclosed Buildings without overhangs 5) NA = "Not Allowed" 6) K_d = 1.00; K_e = 1.00 7) Projects with parapet heights greater than 60 ft shall be evaluated by a licensed design professional 8) V_{ult} is shown in the above table. Design pressures are calculated using $V_{asd} = V_{ult}\sqrt{0.6}$ per 1609.3.1.

This evaluation report is provided for State of Florida product approval under Rule 61G20-3. The manufacturer shall notify CREEK Technical Services, LLC of any product changes or quality assurance changes throughout the duration for which this report is valid. This evaluation report does not express nor imply warranty, installation, recommended use, or other product attributes that are not specifically addressed herein.

16" Econo-Coping LT (Min. 24 ga. Steel)	
Substrate:	Min. No. 2 SPF wood lumber; Alternate substrates shall be evaluated by a licensed design professional.
Coping System:	Components shall be installed as shown below. The maximum parapet wall width shall be 16-inches. The maximum fastener spacing shall be 12-inch o.c.
Maximum Design Pressures (*Pressure calculated using 2:1 margin of safety per 1504.9*)	
Horizontal load on front leg:	**-55 psf**
Vertical load on top leg:	**-90 psf**
Horizontal load on back leg:	**-55 psf**

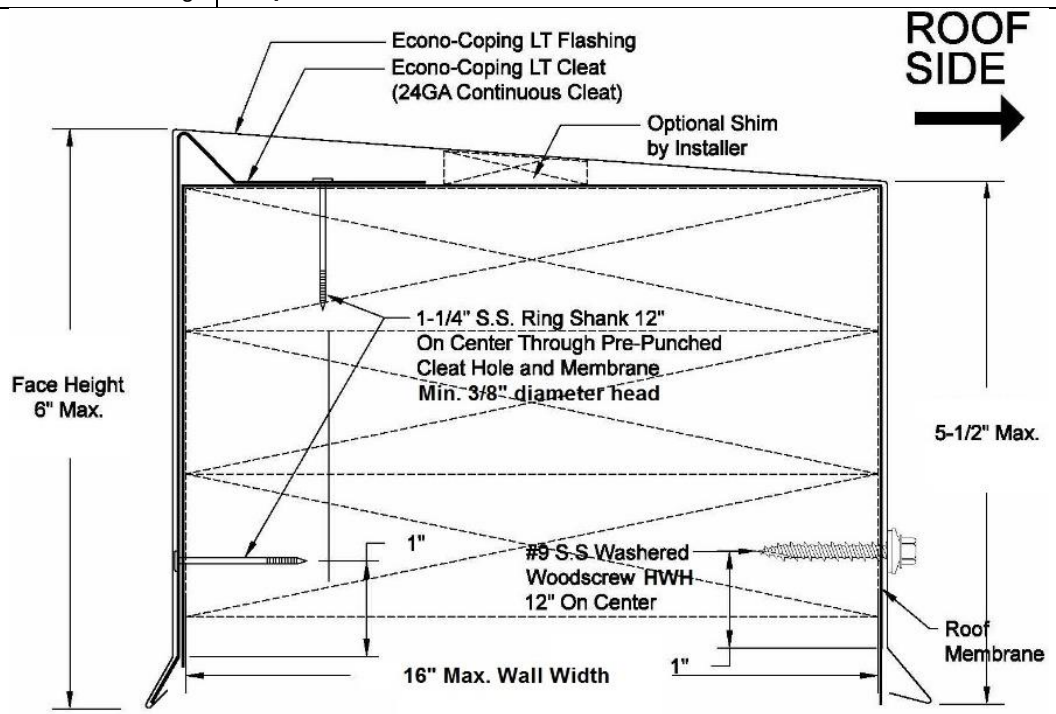

Maximum Parapet Heights for Flat Roofs
Slopes ≤ 1.4:12

Exposure	Basic Wind Speed (mph)								
	110	120	130	140	150	160	170	180	190
Perimeter - Zone 2/Zone 4									
B	60 ft	60 ft	60 ft	35 ft	22 ft	NA	NA	NA	NA
C	60 ft	33 ft	15 ft	NA	NA	NA	NA	NA	NA
D	35 ft	NA	NA	NA	NA	NA	NA	NA	NA
Corner - Zone 3/Zone 5									
B	60 ft	35 ft	20 ft	NA	NA	NA	NA	NA	NA
C	17 ft	NA	NA	NA	NA	NA	NA	NA	NA
D	NA	NA	NA	NA	NA	NA	NA	NA	NA

Notes: 1) Exposure category for the structure location shall be as defined in the Florida Building Code 2) Limitations are based on the exposed area of $10ft^2$ or less 3) Topographic factors such as escarpments or hills are not included in the above assessment 4) Applicable for Enclosed Buildings without overhangs 5) NA = "Not Allowed" 6) K_d = 1.00; K_e = 1.00 7) Projects with parapet heights greater than 60 ft shall be evaluated by a licensed design professional 8) V_{ult} is shown in the above table. Design pressures are calculated using $V_{asd} = V_{ult}\sqrt{0.6}$ per 1609.3.1.

This evaluation report is provided for State of Florida product approval under Rule 61G20-3. The manufacturer shall notify CREEK Technical Services, LLC of any product changes or quality assurance changes throughout the duration for which this report is valid. This evaluation report does not express nor imply warranty, installation, recommended use, or other product attributes that are not specifically addressed herein.

24" Spring-Tite Coping EZ (Min. 0.040" Aluminum)	
Substrate:	Min. No. 2 SPF wood lumber; Alternate substrates shall be evaluated by a licensed design professional.
Coping System:	Components shall be installed as shown below. The maximum parapet wall width shall be 24-inches. The maximum cleat spacing shall be 60-inch o.c.
Maximum Design Pressures (*Pressure calculated using 2:1 margin of safety per 1504.9*)	
Horizontal load on front leg:	**-30.5 psf**
Vertical load on top leg:	**-50 psf**
Horizontal load on back leg:	**-30.5 psf**

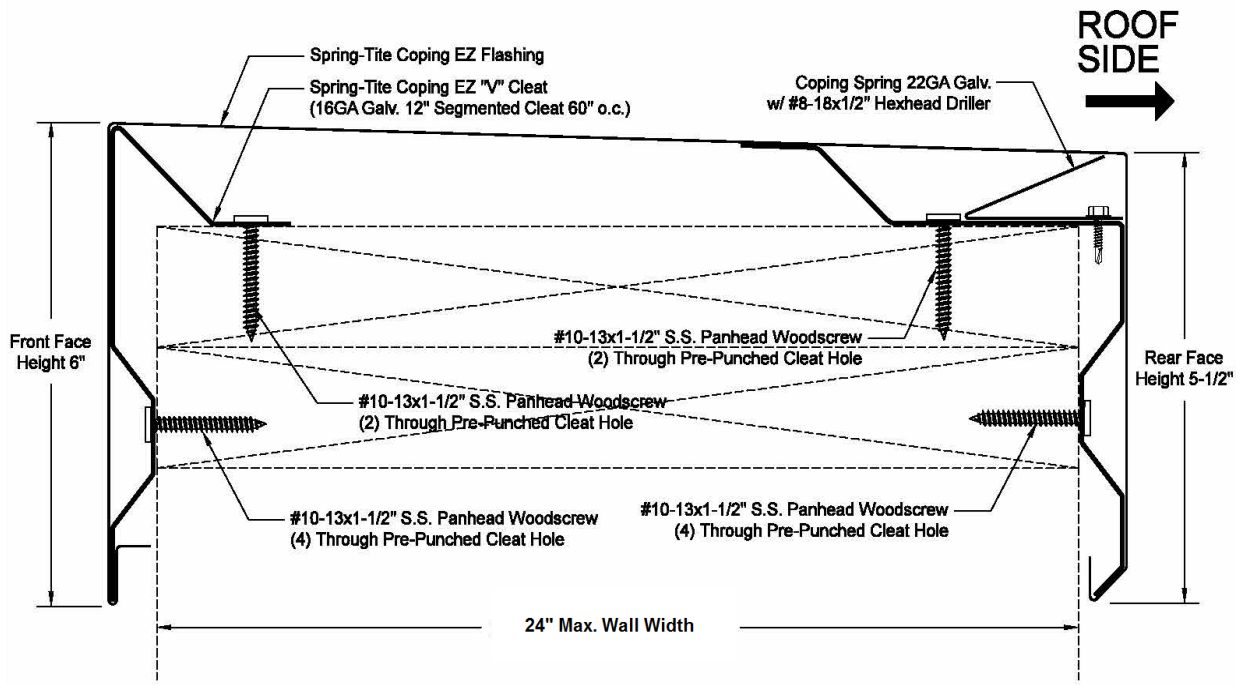

Maximum Parapet Heights for Flat Roofs
Slopes ≤ 1.4:12

Exposure	Basic Wind Speed (mph)								
	105	110	115	120	125	130	140	150	160
Perimeter - Zone 2/Zone 4									
B	34 ft	24 ft	18 ft	NA	NA	NA	NA	NA	NA
C	NA	NA	NA	NA	NA	NA	NA	NA	NA
D	NA	NA	NA	NA	NA	NA	NA	NA	NA
Corner - Zone 3/Zone 5									
B	NA	NA	NA	NA	NA	NA	NA	NA	NA
C	NA	NA	NA	NA	NA	NA	NA	NA	NA
D	NA	NA	NA	NA	NA	NA	NA	NA	NA

Notes: 1) Exposure category for the structure location shall be as defined in the Florida Building Code 2) Limitations are based on the exposed area of 10ft^2 or less 3) Topographic factors such as escarpments or hills are not included in the above assessment 4) Applicable for Enclosed Buildings without overhangs 5) NA = "Not Allowed" 6) K_d = 1.00; K_e = 1.00 7) Projects with parapet heights greater than 60 ft shall be evaluated by a licensed design professional 8) V_{ult} is shown in the above table. Design pressures are calculated using $V_{asd} = V_{ult}\sqrt{0.6}$ per 1609.3.1.

This evaluation report is provided for State of Florida product approval under Rule 61G20-3. The manufacturer shall notify CREEK Technical Services, LLC of any product changes or quality assurance changes throughout the duration for which this report is valid. This evaluation report does not express nor imply warranty, installation, recommended use, or other product attributes that are not specifically addressed herein.

16" Spring-Tite Coping EZ (Min. 0.040" Aluminum)	
Substrate:	Min. No. 2 SPF wood lumber; Alternate substrates shall be evaluated by a licensed design professional.
Coping System:	Components shall be installed as shown below. The maximum parapet wall width shall be 16-inches. The maximum cleat spacing shall be 60-inch o.c.
Maximum Design Pressures (*Pressure calculated using 2:1 margin of safety per 1504.9*)	
Horizontal load on front leg:	**-58 psf**
Vertical load on top leg:	**-95 psf**
Horizontal load on back leg:	**-58 psf**

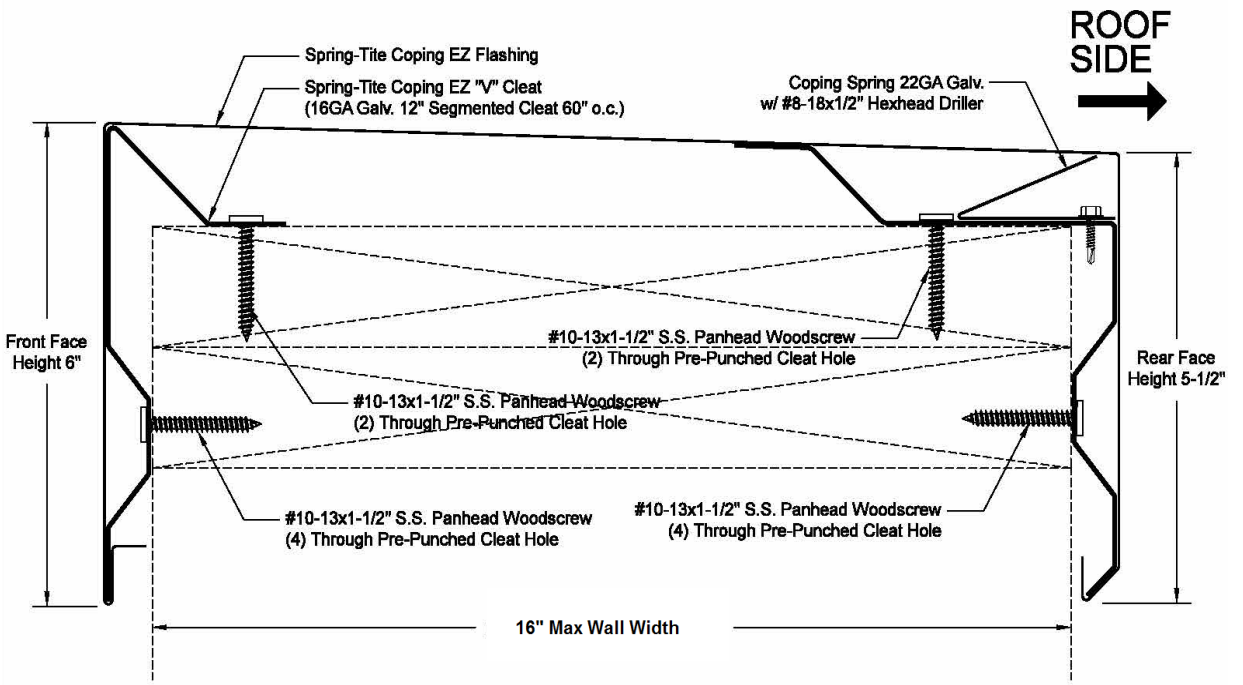

Maximum Parapet Heights for Flat Roofs
Slopes ≤ 1.4:12

Exposure	Basic Wind Speed (mph)								
	110	120	130	140	150	160	170	180	190
Perimeter - Zone 2/Zone 4									
B	60 ft	60 ft	60 ft	43 ft	26 ft	16 ft	NA	NA	NA
C	60 ft	42 ft	19 ft	NA	NA	NA	NA	NA	NA
D	47 ft	17 ft	NA	NA	NA	NA	NA	NA	NA
Corner - Zone 3									
B	60 ft	42 ft	24 ft	15 ft	NA	NA	NA	NA	NA
C	22 ft	NA	NA	NA	NA	NA	NA	NA	NA
D	NA	NA	NA	NA	NA	NA	NA	NA	NA

Notes: 1) Exposure category for the structure location shall be as defined in the Florida Building Code 2) Limitations are based on the exposed area of $10ft^2$ or less 3) Topographic factors such as escarpments or hills are not included in the above assessment 4) Applicable for Enclosed Buildings without overhangs 5) NA = "Not Allowed" 6) K_d = 1.00; K_e = 1.00 7) Projects with parapet heights greater than 60 ft shall be evaluated by a licensed design professional 8) V_{ult} is shown in the above table. Design pressures are calculated using $V_{asd} = V_{ult}\sqrt{0.6}$ per 1609.3.1.

This evaluation report is provided for State of Florida product approval under Rule 61G20-3. The manufacturer shall notify CREEK Technical Services, LLC of any product changes or quality assurance changes throughout the duration for which this report is valid. This evaluation report does not express nor imply warranty, installation, recommended use, or other product attributes that are not specifically addressed herein.

24" Spring-Tite Coping EZ (Min. 24 ga. Steel)	
Substrate:	Min. No. 2 SPF wood lumber; Alternate substrates shall be evaluated by a licensed design professional.
Coping System:	Components shall be installed as shown below. The maximum parapet wall width shall be 24-inches. The maximum cleat spacing shall be 60-inch o.c.
Maximum Design Pressures (*Pressure calculated using 2:1 margin of safety per 1504.9*)	
Horizontal load on front leg:	**-24.4 psf**
Vertical load on top leg:	**-40 psf**
Horizontal load on back leg:	**-24.4 psf**

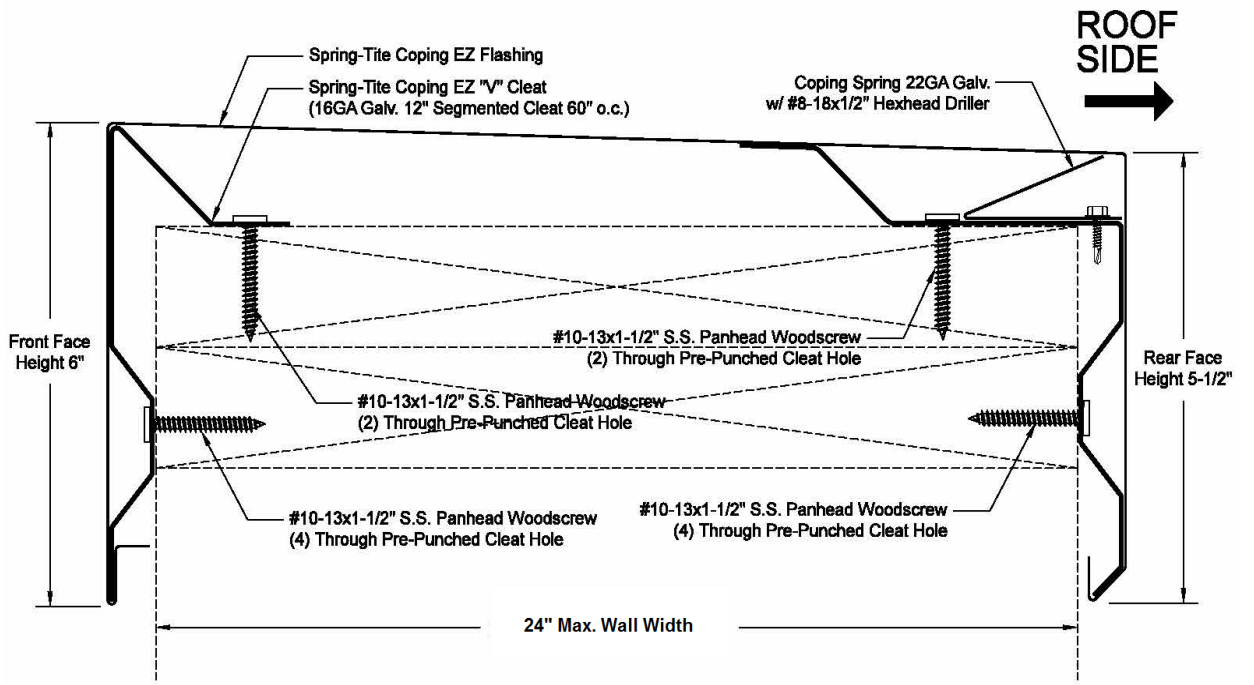

Maximum Parapet Heights for Flat Roofs
Slopes ≤ 1.4:12

Exposure	Basic Wind Speed (mph)								
	105	110	115	120	125	130	140	150	160
Perimeter - Zone 2/Zone 4									
B	15 ft	NA	NA	NA	NA	NA	NA	NA	NA
C	NA	NA	NA	NA	NA	NA	NA	NA	NA
D	NA	NA	NA	NA	NA	NA	NA	NA	NA
Corner - Zone 3/Zone 4									
B	NA	NA	NA	NA	NA	NA	NA	NA	NA
C	NA	NA	NA	NA	NA	NA	NA	NA	NA
D	NA	NA	NA	NA	NA	NA	NA	NA	NA

Notes: 1) Exposure category for the structure location shall be as defined in the Florida Building Code 2) Limitations are based on the exposed area of 10ft^2 or less 3) Topographic factors such as escarpments or hills are not included in the above assessment 4) Applicable for Enclosed Buildings without overhangs 5) NA = "Not Allowed" 6) K_d = 1.00; K_e = 1.00 7) Projects with parapet heights greater than 60 ft shall be evaluated by a licensed design professional 8) V_{ult} is shown in the above table. Design pressures are calculated using $V_{asd} = V_{ult}\sqrt{0.6}$ per 1609.3.1.

This evaluation report is provided for State of Florida product approval under Rule 61G20-3. The manufacturer shall notify CREEK Technical Services, LLC of any product changes or quality assurance changes throughout the duration for which this report is valid. This evaluation report does not express nor imply warranty, installation, recommended use, or other product attributes that are not specifically addressed herein.

16" Spring-Tite Coping EZ (Min. 24 ga. Steel)	
Substrate:	Min. No. 2 SPF wood lumber; Alternate substrates shall be evaluated by a licensed design professional.
Coping System:	Components shall be installed as shown below. The maximum parapet wall width shall be 16-inches. The maximum cleat spacing shall be 60-inch o.c.
Maximum Design Pressures (*Pressure calculated using 2:1 margin of safety per 1504.9*)	
Horizontal load on front leg:	**-55 psf**
Vertical load on top leg:	**-90 psf**
Horizontal load on back leg:	**-55 psf**

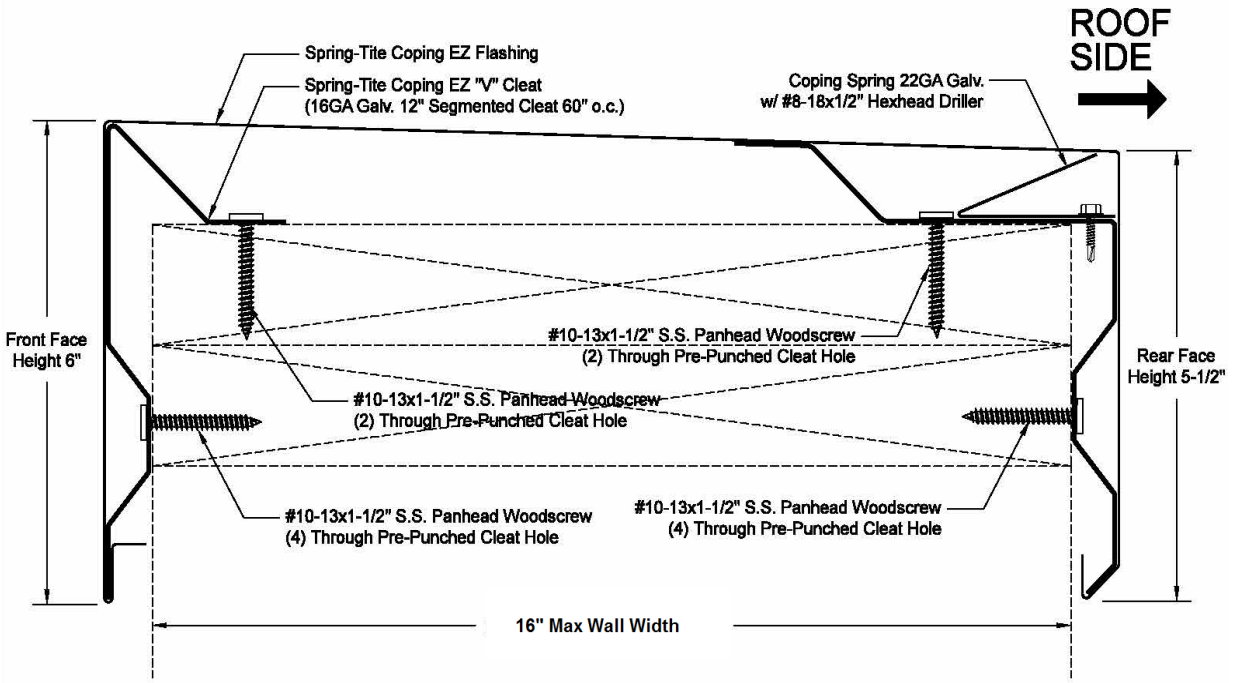

Maximum Parapet Heights for Flat Roofs
Slopes ≤ 1.4:12

Exposure	Basic Wind Speed (mph)								
	110	120	130	140	150	160	170	180	190
Perimeter - Zone 2/Zone 4									
B	60 ft	60 ft	60 ft	35 ft	22 ft	NA	NA	NA	NA
C	60 ft	33 ft	15 ft	NA	NA	NA	NA	NA	NA
D	35 ft	NA	NA	NA	NA	NA	NA	NA	NA
Corner - Zone 3/Zone 5									
B	60 ft	35 ft	20 ft	NA	NA	NA	NA	NA	NA
C	17 ft	NA	NA	NA	NA	NA	NA	NA	NA
D	NA	NA	NA	NA	NA	NA	NA	NA	NA

Notes: 1) Exposure category for the structure location shall be as defined in the Florida Building Code 2) Limitations are based on the exposed area of 10ft^2 or less 3) Topographic factors such as escarpments or hills are not included in the above assessment 4) Applicable for Enclosed Buildings without overhangs 5) NA = "Not Allowed" 6) K_d = 1.00; K_e = 1.00 7) Projects with parapet heights greater than 60 ft shall be evaluated by a licensed design professional 8) V_{ult} is shown in the above table. Design pressures are calculated using $V_{asd} = V_{ult}\sqrt{0.6}$ per 1609.3.1.

This evaluation report is provided for State of Florida product approval under Rule 61G20-3. The manufacturer shall notify CREEK Technical Services, LLC of any product changes or quality assurance changes throughout the duration for which this report is valid. This evaluation report does not express nor imply warranty, installation, recommended use, or other product attributes that are not specifically addressed herein.

24" Spring-Tite Coping HD (Min. 0.040" Aluminum)	
Substrate:	Min. No. 2 SPF wood lumber; Alternate substrates shall be evaluated by a licensed design professional.
Coping System:	Components shall be installed as shown below. The maximum parapet wall width shall be 24-inches. The maximum cleat spacing shall be 60-inch o.c.
Maximum Design Pressures (*Pressure calculated using 2:1 margin of safety per 1504.9*)	
Horizontal load on front leg:	**-42.8 psf**
Vertical load on top leg:	**-70 psf**
Horizontal load on back leg:	**-42.8 psf**

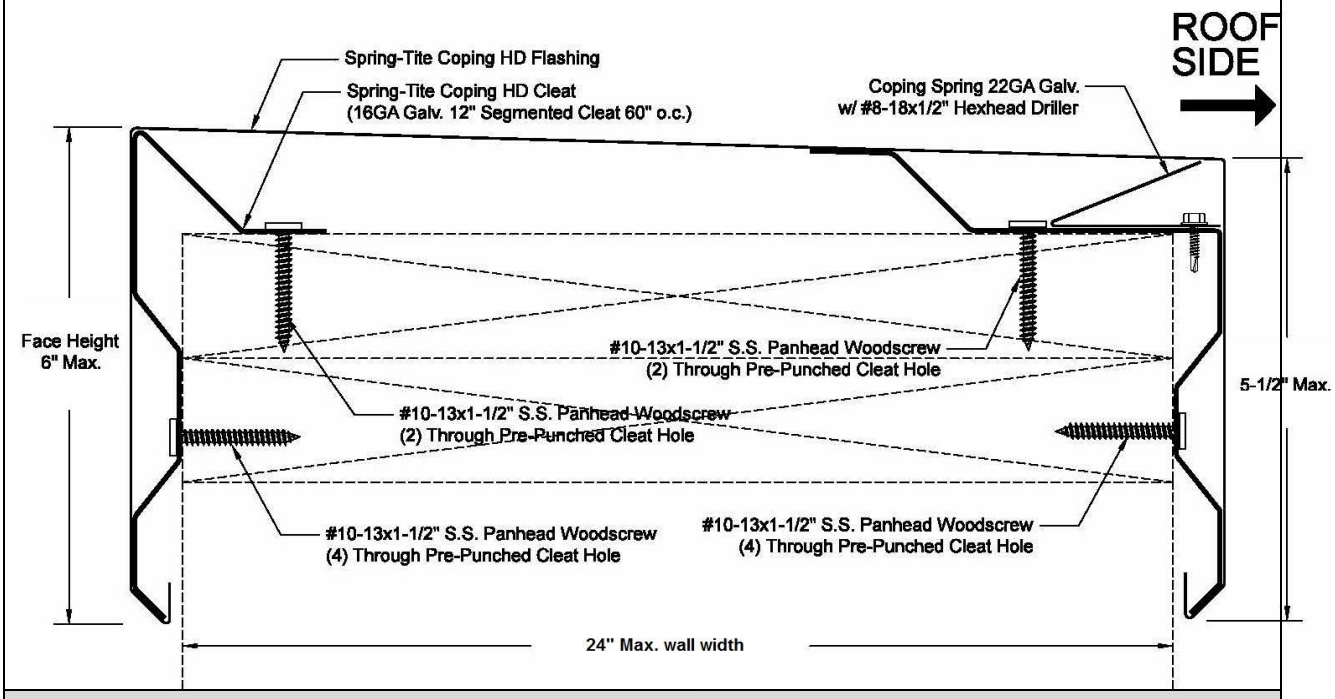

Maximum Parapet Heights for Flat Roofs
Slopes ≤ 1.4:12

Exposure	Basic Wind Speed (mph)								
	105	110	115	120	125	130	140	150	160
Perimeter - Zone 2/Zone 4									
B	60 ft	60 ft	59 ft	43 ft	33 ft	25 ft	15 ft	NA	NA
C	36 ft	23 ft	15 ft	NA	NA	NA	NA	NA	NA
D	NA	NA	NA	NA	NA	NA	NA	NA	NA
Corner - Zone 3/Zone 5									
B	37 ft	27 ft	20 ft	15 ft	NA	NA	NA	NA	NA
C	NA	NA	NA	NA	NA	NA	NA	NA	NA
D	NA	NA	NA	NA	NA	NA	NA	NA	NA

Notes: 1) Exposure category for the structure location shall be as defined in the Florida Building Code 2) Limitations are based on the exposed area of $10ft^2$ or less 3) Topographic factors such as escarpments or hills are not included in the above assessment 4) Applicable for Enclosed Buildings without overhangs 5) NA = "Not Allowed" 6) K_d = 1.00; K_e = 1.00 7) Projects with parapet heights greater than 60 ft shall be evaluated by a licensed design professional 8) V_{ult} is shown in the above table. Design pressures are calculated using $V_{asd} = V_{ult}\sqrt{0.6}$ per 1609.3.1.

This evaluation report is provided for State of Florida product approval under Rule 61G20-3. The manufacturer shall notify CREEK Technical Services, LLC of any product changes or quality assurance changes throughout the duration for which this report is valid. This evaluation report does not express nor imply warranty, installation, recommended use, or other product attributes that are not specifically addressed herein.

16" Spring-Tite Coping HD (Min. 0.040" Aluminum)	
Substrate:	Min. No. 2 SPF wood lumber; Alternate substrates shall be evaluated by a licensed design professional.
Coping System:	Components shall be installed as shown below. The maximum parapet wall width shall be 16-inches. The maximum cleat spacing shall be 60-inch o.c.
Maximum Design Pressures (*Pressure calculated using 2:1 margin of safety per 1504.9*)	
Horizontal load on front leg:	**-61.1 psf**
Vertical load on top leg:	**-100 psf**
Horizontal load on back leg:	**-61.1 psf**

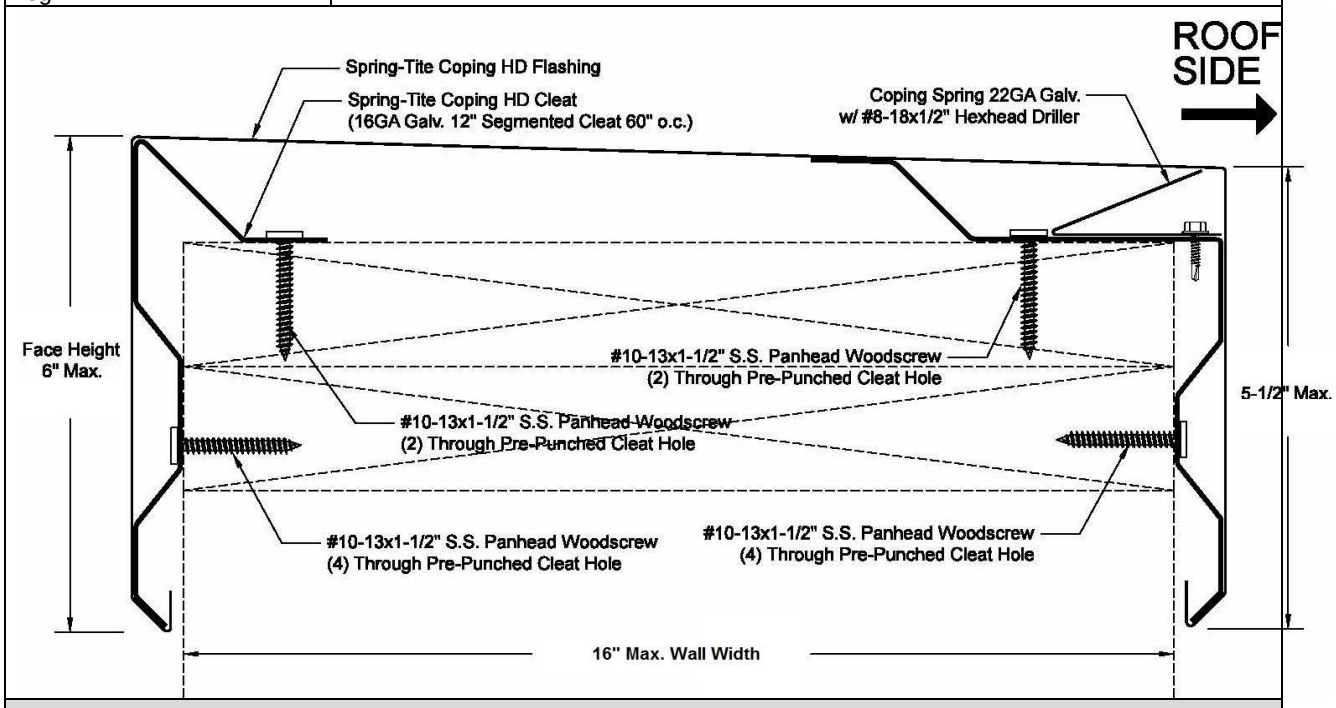

Maximum Parapet Heights for Flat Roofs
Slopes ≤ 1.4:12

Exposure	Basic Wind Speed (mph)								
	110	120	130	140	150	160	170	180	190
Perimeter - Zone 2/Zone 4									
B	60 ft	60 ft	60 ft	51 ft	32 ft	20 ft	NA	NA	NA
C	60 ft	54 ft	25 ft	NA	NA	NA	NA	NA	NA
D	60 ft	23 ft	NA	NA	NA	NA	NA	NA	NA
Corner - Zone 3/Zone 5									
B	60 ft	51 ft	29 ft	17 ft	NA	NA	NA	NA	NA
C	28 ft	NA	NA	NA	NA	NA	NA	NA	NA
D	NA	NA	NA	NA	NA	NA	NA	NA	NA

Notes: 1) Exposure category for the structure location shall be as defined in the Florida Building Code 2) Limitations are based on the exposed area of 10ft^2 or less 3) Topographic factors such as escarpments or hills are not included in the above assessment 4) Applicable for Enclosed Buildings without overhangs 5) NA = "Not Allowed" 6) K_d = 1.00; K_e = 1.00 7) Projects with parapet heights greater than 60 ft shall be evaluated by a licensed design professional 8) V_{ult} is shown in the above table. Design pressures are calculated using $V_{asd} = V_{ult}\sqrt{0.6}$ per 1609.3.1.

This evaluation report is provided for State of Florida product approval under Rule 61G20-3. The manufacturer shall notify CREEK Technical Services, LLC of any product changes or quality assurance changes throughout the duration for which this report is valid. This evaluation report does not express nor imply warranty, installation, recommended use, or other product attributes that are not specifically addressed herein.

24" Spring-Tite Coping HD (Min. 24 ga. Steel)	
Substrate:	Min. No. 2 SPF wood lumber; Alternate substrates shall be evaluated by a licensed design professional.
Coping System:	Components shall be installed as shown below. The maximum parapet wall width shall be 24-inches. The maximum cleat spacing shall be 60-inch o.c.
Maximum Design Pressures (*Pressure calculated using 2:1 margin of safety per 1504.9*)	
Horizontal load on front leg:	**-39.7 psf**
Vertical load on top leg:	**-65 psf**
Horizontal load on back leg:	**-39.7 psf**

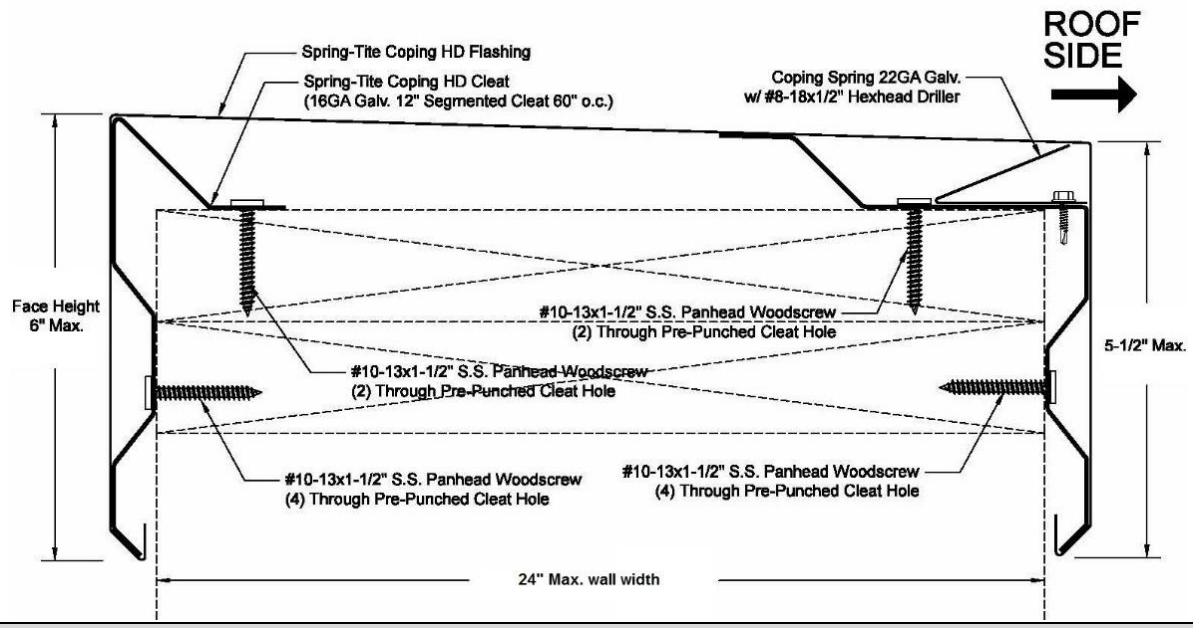

Maximum Parapet Heights for Flat Roofs
Slopes ≤ 1.4:12

Exposure	Basic Wind Speed (mph)								
	105	110	115	120	125	130	140	150	160
Perimeter - Zone 2/Zone 4									
B	60 ft	60 ft	45 ft	33 ft	25 ft	19 ft	NA	NA	NA
C	25 ft	16 ft	NA	NA	NA	NA	NA	NA	NA
D	NA	NA	NA	NA	NA	NA	NA	NA	NA
Corner - Zone 3/Zone 5									
B	29 ft	21 ft	15 ft	NA	NA	NA	NA	NA	NA
C	NA	NA	NA	NA	NA	NA	NA	NA	NA
D	NA	NA	NA	NA	NA	NA	NA	NA	NA

Notes: 1) Exposure category for the structure location shall be as defined in the Florida Building Code 2) Limitations are based on the exposed area of 10ft^2 or less 3) Topographic factors such as escarpments or hills are not included in the above assessment 4) Applicable for Enclosed Buildings without overhangs 5) NA = "Not Allowed" 6) K_d = 1.00; K_e = 1.00 7) Projects with parapet heights greater than 60 ft shall be evaluated by a licensed design professional 8) V_{ult} is shown in the above table. Design pressures are calculated using $V_{asd} = V_{ult}\sqrt{0.6}$ per 1609.3.1.

This evaluation report is provided for State of Florida product approval under Rule 61G20-3. The manufacturer shall notify CREEK Technical Services, LLC of any product changes or quality assurance changes throughout the duration for which this report is valid. This evaluation report does not express nor imply warranty, installation, recommended use, or other product attributes that are not specifically addressed herein.

16" Spring-Tite Coping HD (Min. 24 ga. Steel)	
Substrate:	Min. No. 2 SPF wood lumber; Alternate substrates shall be evaluated by a licensed design professional.
Coping System:	Components shall be installed as shown below. The maximum parapet wall width shall be 16-inches. The maximum cleat spacing shall be 60-inch o.c.
Maximum Design Pressures (*Pressure calculated using 2:1 margin of safety per 1504.9*)	
Horizontal load on front leg:	**-55 psf**
Vertical load on top leg:	**-90 psf**
Horizontal load on back leg:	**-55 psf**

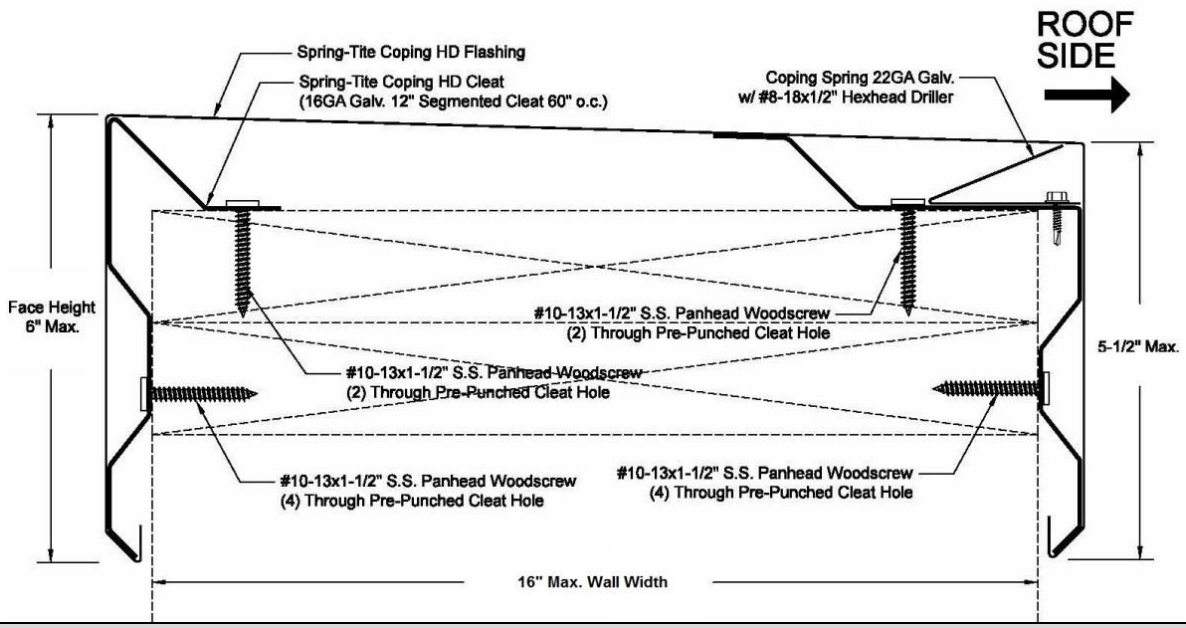

Maximum Parapet Heights for Flat Roofs
Slopes ≤ 1.4:12

Exposure	Basic Wind Speed (mph)								
	110	120	130	140	150	160	170	180	190
Perimeter - Zone 2/Zone 4									
B	60 ft	60 ft	60 ft	35 ft	22 ft	NA	NA	NA	NA
C	60 ft	33 ft	15 ft	NA	NA	NA	NA	NA	NA
D	35 ft	NA	NA	NA	NA	NA	NA	NA	NA
Corner - Zone 3/Zone 5									
B	60 ft	35 ft	20 ft	NA	NA	NA	NA	NA	NA
C	17 ft	NA	NA	NA	NA	NA	NA	NA	NA
D	NA	NA	NA	NA	NA	NA	NA	NA	NA

Notes: 1) Exposure category for the structure location shall be as defined in the Florida Building Code 2) Limitations are based on the exposed area of 10ft^2 or less 3) Topographic factors such as escarpments or hills are not included in the above assessment 4) Applicable for Enclosed Buildings without overhangs 5) NA = "Not Allowed" 6) K_d = 1.00; K_e = 1.00 7) Projects with parapet heights greater than 60 ft shall be evaluated by a licensed design professional 8) V_{ult} is shown in the above table. Design pressures are calculated using $V_{asd} = V_{ult}\sqrt{0.6}$ per 1609.3.1.

This evaluation report is provided for State of Florida product approval under Rule 61G20-3. The manufacturer shall notify CREEK Technical Services, LLC of any product changes or quality assurance changes throughout the duration for which this report is valid. This evaluation report does not express nor imply warranty, installation, recommended use, or other product attributes that are not specifically addressed herein.

24" Spring-Tite Coping LT (Min. 0.040" Aluminum)	
Substrate:	Min. No. 2 SPF wood lumber; Alternate substrates shall be evaluated by a licensed design professional.
Coping System:	Components shall be installed as shown below. The maximum parapet wall width shall be 24-inches. The maximum cleat spacing shall be 60-inch o.c.
Maximum Design Pressures (*Pressure calculated using 2:1 margin of safety per 1504.9*)	
Horizontal load on front leg:	**-30.5 psf**
Vertical load on top leg:	**-50 psf**
Horizontal load on back leg:	**-30.5 psf**

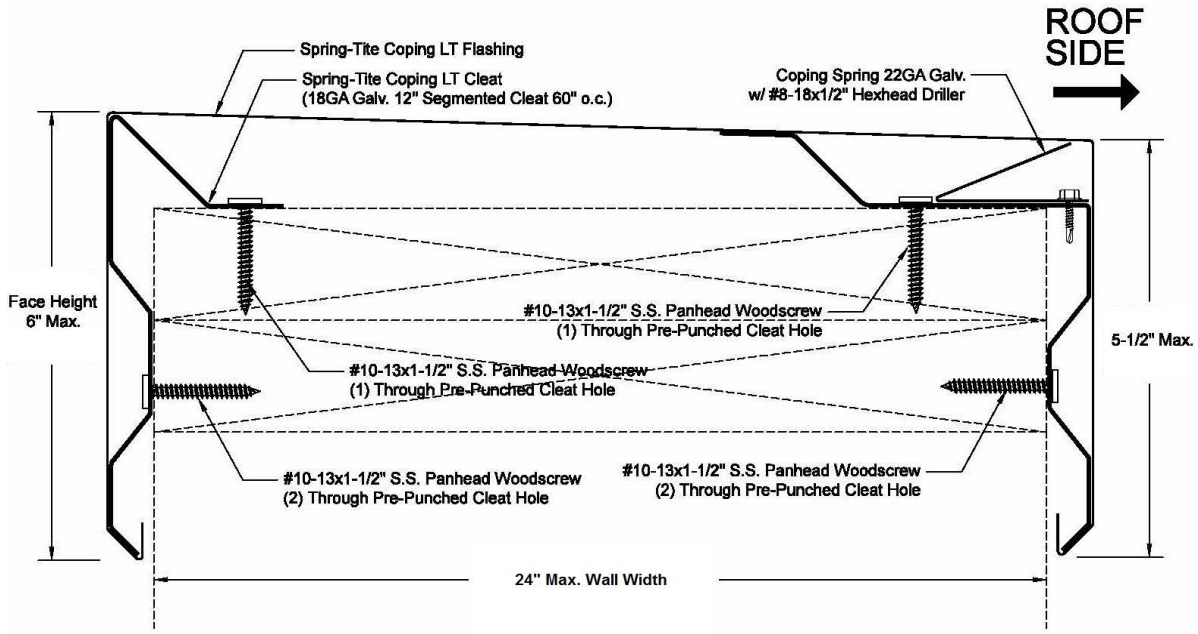

Maximum Parapet Heights for Flat Roofs
Slopes ≤ 1.4:12

Exposure	Basic Wind Speed (mph)								
	105	110	115	120	125	130	140	150	160
Perimeter - Zone 2/Zone 4									
B	34 ft	24 ft	18 ft	NA	NA	NA	NA	NA	NA
C	NA	NA	NA	NA	NA	NA	NA	NA	NA
D	NA	NA	NA	NA	NA	NA	NA	NA	NA
Corner - Zone 3/Zone 5									
B	NA	NA	NA	NA	NA	NA	NA	NA	NA
C	NA	NA	NA	NA	NA	NA	NA	NA	NA
D	NA	NA	NA	NA	NA	NA	NA	NA	NA

Notes: 1) Exposure category for the structure location shall be as defined in the Florida Building Code 2) Limitations are based on the exposed area of 10ft^2 or less 3) Topographic factors such as escarpments or hills are not included in the above assessment 4) Applicable for Enclosed Buildings without overhangs 5) NA = "Not Allowed" 6) K_d = 1.00; K_e = 1.00 7) Projects with parapet heights greater than 60 ft shall be evaluated by a licensed design professional 8) V_{ult} is shown in the above table. Design pressures are calculated using $V_{asd} = V_{ult}\sqrt{0.6}$ per 1609.3.1.

This evaluation report is provided for State of Florida product approval under Rule 61G20-3. The manufacturer shall notify CREEK Technical Services, LLC of any product changes or quality assurance changes throughout the duration for which this report is valid. This evaluation report does not express nor imply warranty, installation, recommended use, or other product attributes that are not specifically addressed herein.

16" Spring-Tite Coping LT (Min. 0.040" Aluminum)	
Substrate:	Min. No. 2 SPF wood lumber; Alternate substrates shall be evaluated by a licensed design professional.
Coping System:	Components shall be installed as shown below. The maximum parapet wall width shall be 16-inches. The maximum cleat spacing shall be 60-inch o.c.
Maximum Design Pressures (*Pressure calculated using 2:1 margin of safety per 1504.9*)	
Horizontal load on front leg:	**-48.9 psf**
Vertical load on top leg:	**-80 psf**
Horizontal load on back leg:	**-48.9 psf**

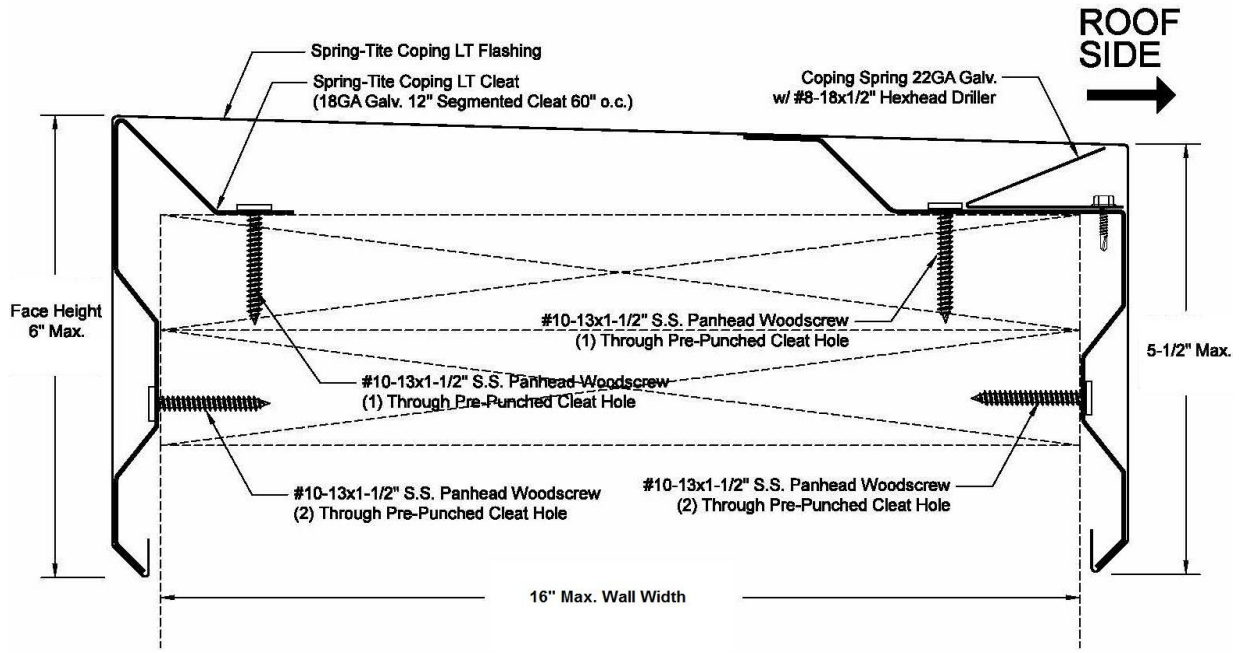

Maximum Parapet Heights for Flat Roofs
Slopes ≤ 1.4:12

Exposure	Basic Wind Speed (mph)								
	110	120	130	140	150	160	170	180	190
Perimeter - Zone 2/Zone 4									
B	60 ft	60 ft	39 ft	23 ft	15 ft	NA	NA	NA	NA
C	43 ft	18 ft	NA	NA	NA	NA	NA	NA	NA
D	17 ft	NA	NA	NA	NA	NA	NA	NA	NA
Corner - Zone 3/Zone 5									
B	43 ft	23 ft	NA	NA	NA	NA	NA	NA	NA
C	NA	NA	NA	NA	NA	NA	NA	NA	NA
D	NA	NA	NA	NA	NA	NA	NA	NA	NA

Notes: 1) Exposure category for the structure location shall be as defined in the Florida Building Code 2) Limitations are based on the exposed area of $10ft^2$ or less 3) Topographic factors such as escarpments or hills are not included in the above assessment 4) Applicable for Enclosed Buildings without overhangs 5) NA = "Not Allowed" 6) K_d = 1.00; K_e = 1.00 7) Projects with parapet heights greater than 60 ft shall be evaluated by a licensed design professional 8) V_{ult} is shown in the above table. Design pressures are calculated using $V_{asd} = V_{ult}\sqrt{0.6}$ per 1609.3.1.

This evaluation report is provided for State of Florida product approval under Rule 61G20-3. The manufacturer shall notify CREEK Technical Services, LLC of any product changes or quality assurance changes throughout the duration for which this report is valid. This evaluation report does not express nor imply warranty, installation, recommended use, or other product attributes that are not specifically addressed herein.

24" Spring-Tite Coping LT (Min. 24 ga. Steel)	
Substrate:	Min. No. 2 SPF wood lumber; Alternate substrates shall be evaluated by a licensed design professional.
Coping System:	Components shall be installed as shown below. The maximum parapet wall width shall be 24-inches. The maximum cleat spacing shall be 60-inch o.c.
Maximum Design Pressures (*Pressure calculated using 2:1 margin of safety per 1504.9*)	
Horizontal load on front leg:	**-27.5 psf**
Vertical load on top leg:	**-45 psf**
Horizontal load on back leg:	**-27.5 psf**

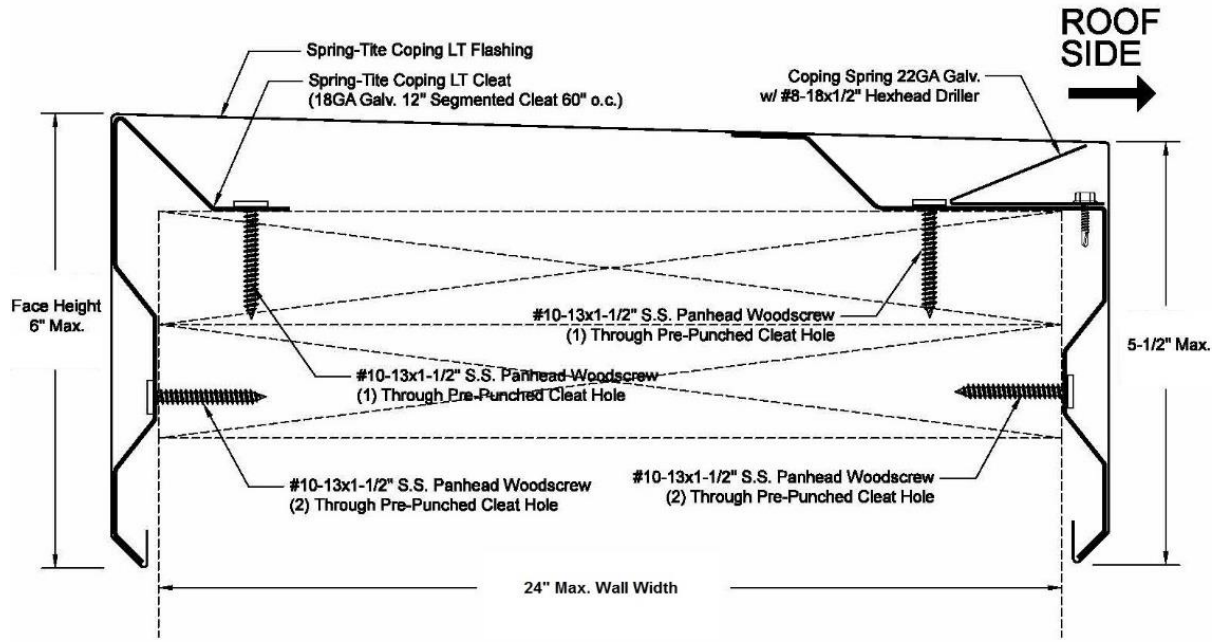

Maximum Parapet Heights for Flat Roofs
Slopes ≤ 1.4:12

Exposure	Basic Wind Speed (mph)								
	105	110	115	120	125	130	140	150	160
Perimeter - Zone 2/Zone 4									
B	23 ft	17 ft	NA	NA	NA	NA	NA	NA	NA
C	NA	NA	NA	NA	NA	NA	NA	NA	NA
D	NA	NA	NA	NA	NA	NA	NA	NA	NA
Corner - Zone 3/Zone 5									
B	NA	NA	NA	NA	NA	NA	NA	NA	NA
C	NA	NA	NA	NA	NA	NA	NA	NA	NA
D	NA	NA	NA	NA	NA	NA	NA	NA	NA

Notes: 1) Exposure category for the structure location shall be as defined in the Florida Building Code 2) Limitations are based on the exposed area of $10ft^2$ or less 3) Topographic factors such as escarpments or hills are not included in the above assessment 4) Applicable for Enclosed Buildings without overhangs 5) NA = "Not Allowed" 6) K_d = 1.00; K_e = 1.00 7) Projects with parapet heights greater than 60 ft shall be evaluated by a licensed design professional 8) V_{ult} is shown in the above table. Design pressures are calculated using $V_{asd} = V_{ult}\sqrt{0.6}$ per 1609.3.1.

This evaluation report is provided for State of Florida product approval under Rule 61G20-3. The manufacturer shall notify CREEK Technical Services, LLC of any product changes or quality assurance changes throughout the duration for which this report is valid. This evaluation report does not express nor imply warranty, installation, recommended use, or other product attributes that are not specifically addressed herein.

16" Spring-Tite Coping LT (Min. 24 ga. Steel)	
Substrate:	Min. No. 2 SPF wood lumber; Alternate substrates shall be evaluated by a licensed design professional.
Coping System:	Components shall be installed as shown below. The maximum parapet wall width shall be 16-inches. The maximum cleat spacing shall be 60-inch o.c.
Maximum Design Pressures (*Pressure calculated using 2:1 margin of safety per 1504.9*)	
Horizontal load on front leg:	**-48.9 psf**
Vertical load on top leg:	**-80 psf**
Horizontal load on back leg:	**-48.9 psf**

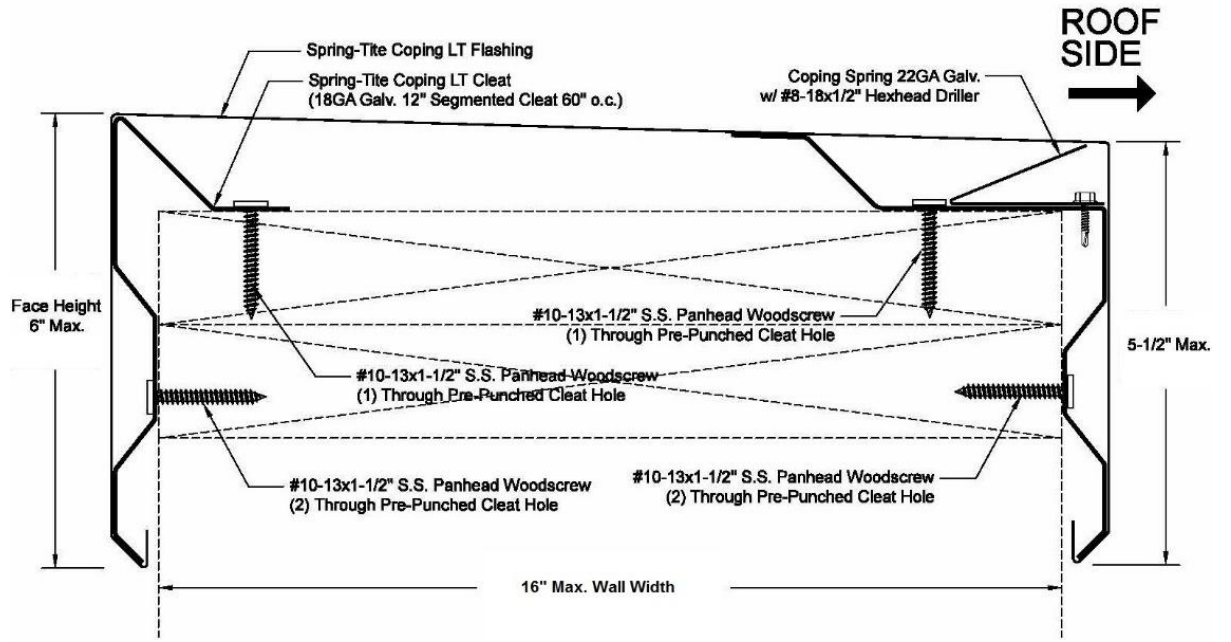

Maximum Parapet Heights for Flat Roofs
Slopes ≤ 1.4:12

Exposure	Basic Wind Speed (mph)								
	110	120	130	140	150	160	170	180	190
Perimeter - Zone 2/Zone 4									
B	60 ft	60 ft	39 ft	23 ft	15 ft	NA	NA	NA	NA
C	43 ft	18 ft	NA	NA	NA	NA	NA	NA	NA
D	17 ft	NA	NA	NA	NA	NA	NA	NA	NA
Corner - Zone 3/Zone 5									
B	43 ft	23 ft	NA	NA	NA	NA	NA	NA	NA
C	NA	NA	NA	NA	NA	NA	NA	NA	NA
D	NA	NA	NA	NA	NA	NA	NA	NA	NA

Notes: 1) Exposure category for the structure location shall be as defined in the Florida Building Code 2) Limitations are based on the exposed area of $10ft^2$ or less 3) Topographic factors such as escarpments or hills are not included in the above assessment 4) Applicable for Enclosed Buildings without overhangs 5) NA = "Not Allowed" 6) K_d = 1.00; K_e = 1.00 7) Projects with parapet heights greater than 60 ft shall be evaluated by a licensed design professional 8) V_{ult} is shown in the above table. Design pressures are calculated using $V_{asd} = V_{ult}\sqrt{0.6}$ per 1609.3.1.

This evaluation report is provided for State of Florida product approval under Rule 61G20-3. The manufacturer shall notify CREEK Technical Services, LLC of any product changes or quality assurance changes throughout the duration for which this report is valid. This evaluation report does not express nor imply warranty, installation, recommended use, or other product attributes that are not specifically addressed herein.

Snap Coping Flex (Min. 0.040" Aluminum)	
Substrate:	Min. No. 2 SPF wood lumber; Alternate substrates shall be evaluated by a licensed design professional.
Coping System:	Components shall be installed as shown below. The maximum parapet wall width shall be 24-inches. The maximum cleat spacing shall be 40-inch o.c.
Maximum Design Pressures (*Pressure calculated using 2:1 margin of safety per 1504.9*)	
Horizontal load on front leg:	**-22.5 psf**
Vertical load on top leg:	**-25 psf**
Horizontal load on back leg:	**-15 psf**

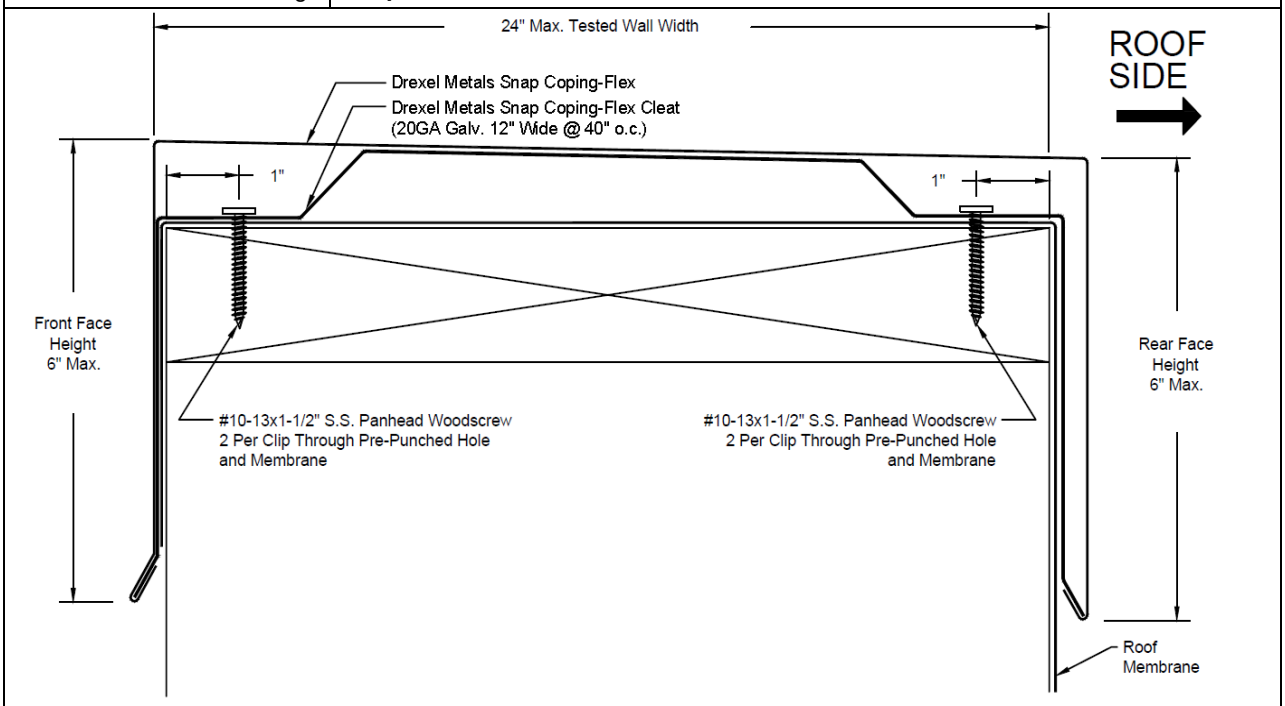

Maximum Parapet Heights for Flat Roofs
Slopes ≤ 1.4:12

Exposure	Basic Wind Speed (mph)								
	105	110	115	120	125	130	135	140	145
Perimeter - Zone 2/Zone 4									
B	NA	NA	NA	NA	NA	NA	NA	NA	NA
C	NA	NA	NA	NA	NA	NA	NA	NA	NA
D	NA	NA	NA	NA	NA	NA	NA	NA	NA
Corner - Zone 3/Zone 5									
B	NA	NA	NA	NA	NA	NA	NA	NA	NA
C	NA	NA	NA	NA	NA	NA	NA	NA	NA
D	NA	NA	NA	NA	NA	NA	NA	NA	NA

Notes: 1) Exposure category for the structure location shall be as defined in the Florida Building Code 2) Limitations are based on the exposed area of 10ft^2 or less 3) Topographic factors such as escarpments or hills are not included in the above assessment 4) Applicable for Enclosed Buildings without overhangs 5) NA = "Not Allowed" 6) K_d = 1.00; K_e = 1.00 7) Projects with parapet heights greater than 60 ft shall be evaluated by a licensed design professional 8) V_{ult} is shown in the above table. Design pressures are calculated using $V_{asd} = V_{ult}\sqrt{0.6}$ per 1609.3.1.

This evaluation report is provided for State of Florida product approval under Rule 61G20-3. The manufacturer shall notify CREEK Technical Services, LLC of any product changes or quality assurance changes throughout the duration for which this report is valid. This evaluation report does not express nor imply warranty, installation, recommended use, or other product attributes that are not specifically addressed herein.

Snap Coping Flex (Min. 24 ga. Steel)	
Substrate:	Min. No. 2 SPF wood lumber; Alternate substrates shall be evaluated by a licensed design professional.
Coping System:	Components shall be installed as shown below. The maximum parapet wall width shall be 24-inches. The maximum cleat spacing shall be 40-inch o.c.
Maximum Design Pressures (*Pressure calculated using 2:1 margin of safety per 1504.9*)	
Horizontal load on front leg:	**-15 psf**
Vertical load on top leg:	**-25 psf**
Horizontal load on back leg:	**-15 psf**

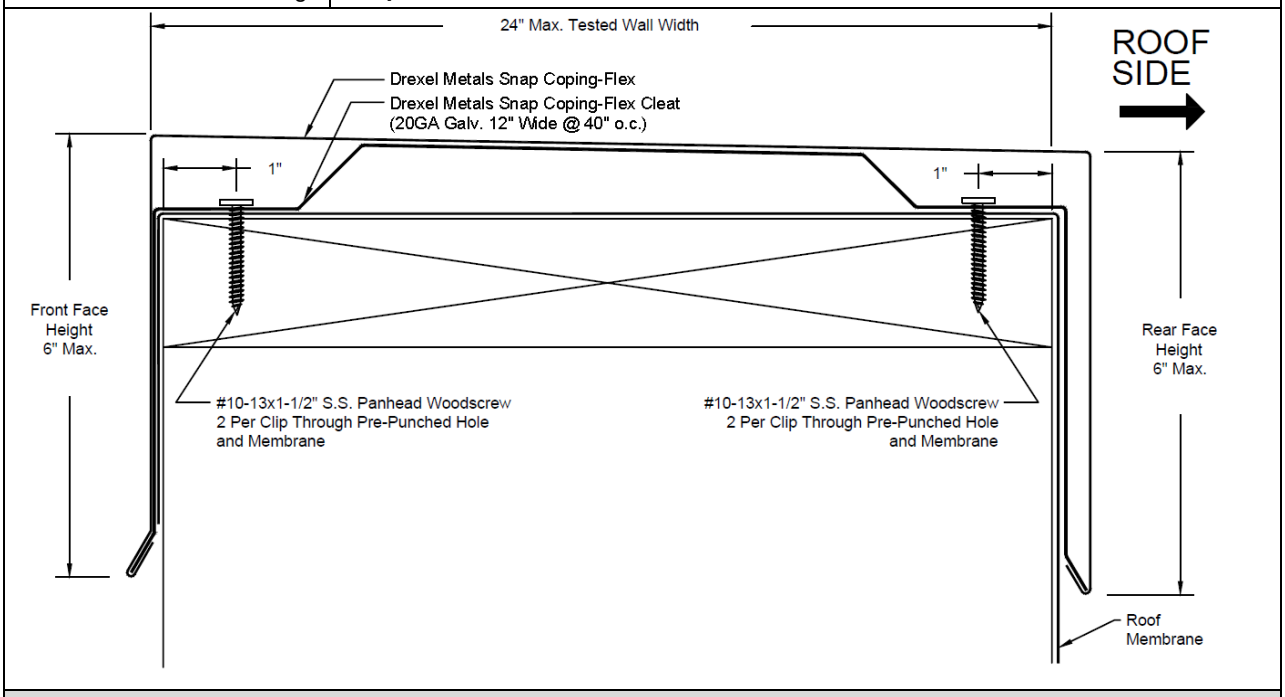

Maximum Parapet Heights for Flat Roofs
Slopes ≤ 1.4:12

Exposure	Basic Wind Speed (mph)								
	105	110	115	120	125	130	135	140	145
Perimeter - Zone 2/Zone 4									
B	NA	NA	NA	NA	NA	NA	NA	NA	NA
C	NA	NA	NA	NA	NA	NA	NA	NA	NA
D	NA	NA	NA	NA	NA	NA	NA	NA	NA
Corner - Zone 3/Zone 5									
B	NA	NA	NA	NA	NA	NA	NA	NA	NA
C	NA	NA	NA	NA	NA	NA	NA	NA	NA
D	NA	NA	NA	NA	NA	NA	NA	NA	NA

Notes: 1) Exposure category for the structure location shall be as defined in the Florida Building Code 2) Limitations are based on the exposed area of 10ft^2 or less 3) Topographic factors such as escarpments or hills are not included in the above assessment 4) Applicable for Enclosed Buildings without overhangs 5) NA = "Not Allowed" 6) K_d = 1.00; K_e = 1.00 7) Projects with parapet heights greater than 60 ft shall be evaluated by a licensed design professional 8) V_{ult} is shown in the above table. Design pressures are calculated using $V_{asd} = V_{ult}\sqrt{0.6}$ per 1609.3.1.

This evaluation report is provided for State of Florida product approval under Rule 61G20-3. The manufacturer shall notify CREEK Technical Services, LLC of any product changes or quality assurance changes throughout the duration for which this report is valid. This evaluation report does not express nor imply warranty, installation, recommended use, or other product attributes that are not specifically addressed herein.

Snap Coping Flex-C (Min. 0.040" Aluminum)	
Substrate:	Min. No. 2 SPF wood lumber; Alternate substrates shall be evaluated by a licensed design professional.
Coping System:	Components shall be installed as shown below. The maximum parapet wall width shall be 24-inches. The maximum cleat spacing shall be 40-inch o.c.
Maximum Design Pressures (*Pressure calculated using 2:1 margin of safety per 1504.9*)	
Horizontal load on front leg:	**-15 psf**
Vertical load on top leg:	**-12.5 psf**
Horizontal load on back leg:	**-7.5 psf**

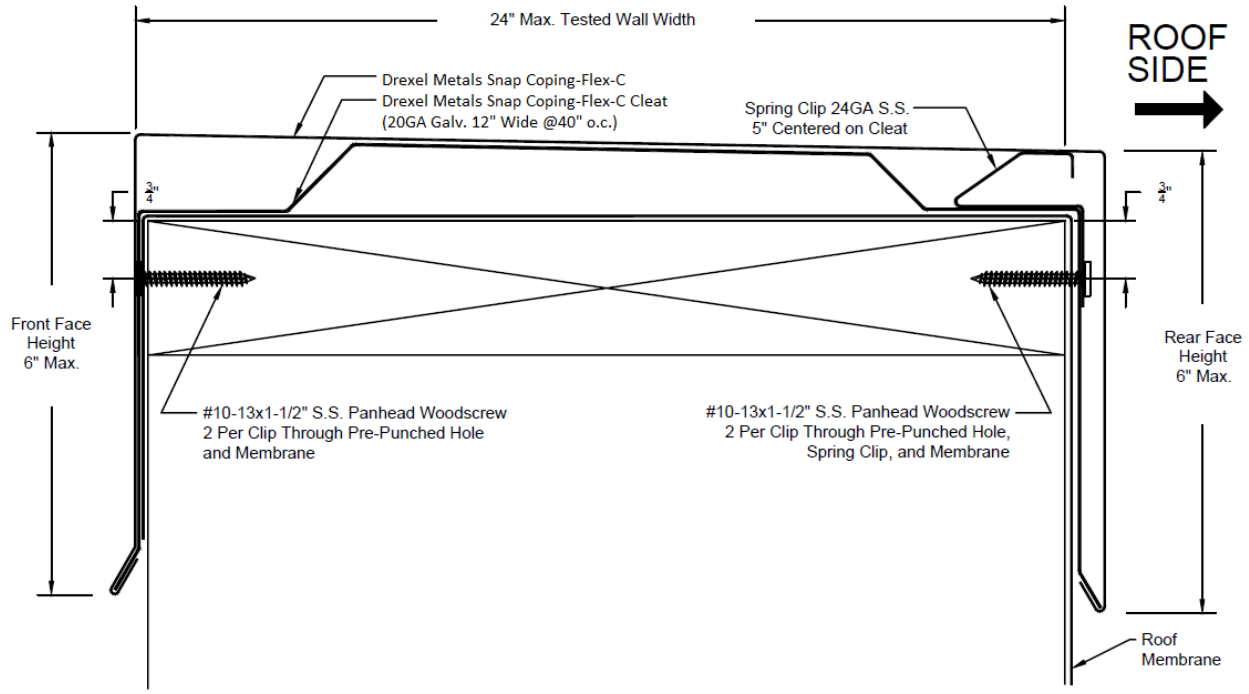

Maximum Parapet Heights for Flat Roofs
Slopes ≤ 1.4:12

Exposure	Basic Wind Speed (mph)								
	105	110	115	120	125	130	135	140	145
Perimeter - Zone 2/Zone 4									
B	NA	NA	NA	NA	NA	NA	NA	NA	NA
C	NA	NA	NA	NA	NA	NA	NA	NA	NA
D	NA	NA	NA	NA	NA	NA	NA	NA	NA
Corner - Zone 3/Zone 5									
B	NA	NA	NA	NA	NA	NA	NA	NA	NA
C	NA	NA	NA	NA	NA	NA	NA	NA	NA
D	NA	NA	NA	NA	NA	NA	NA	NA	NA

Notes: 1) Exposure category for the structure location shall be as defined in the Florida Building Code 2) Limitations are based on the exposed area of 10ft^2 or less 3) Topographic factors such as escarpments or hills are not included in the above assessment 4) Applicable for Enclosed Buildings without overhangs 5) NA = "Not Allowed" 6) K_d = 1.00; K_e = 1.00 7) Projects with parapet heights greater than 60 ft shall be evaluated by a licensed design professional 8) V_{ult} is shown in the above table. Design pressures are calculated using $V_{asd} = V_{ult}\sqrt{0.6}$ per 1609.3.1.

This evaluation report is provided for State of Florida product approval under Rule 61G20-3. The manufacturer shall notify CREEK Technical Services, LLC of any product changes or quality assurance changes throughout the duration for which this report is valid. This evaluation report does not express nor imply warranty, installation, recommended use, or other product attributes that are not specifically addressed herein.

Snap Coping Flex-C (Min. 24 ga. Steel)	
Substrate:	Min. No. 2 SPF wood lumber; Alternate substrates shall be evaluated by a licensed design professional.
Coping System:	Components shall be installed as shown below. The maximum parapet wall width shall be 24-inches. The maximum cleat spacing shall be 40-inch o.c.
Maximum Design Pressures (*Pressure calculated using 2:1 margin of safety per 1504.9*)	
Horizontal load on front leg:	**-15 psf**
Vertical load on top leg:	**-25 psf**
Horizontal load on back leg:	**-15 psf**

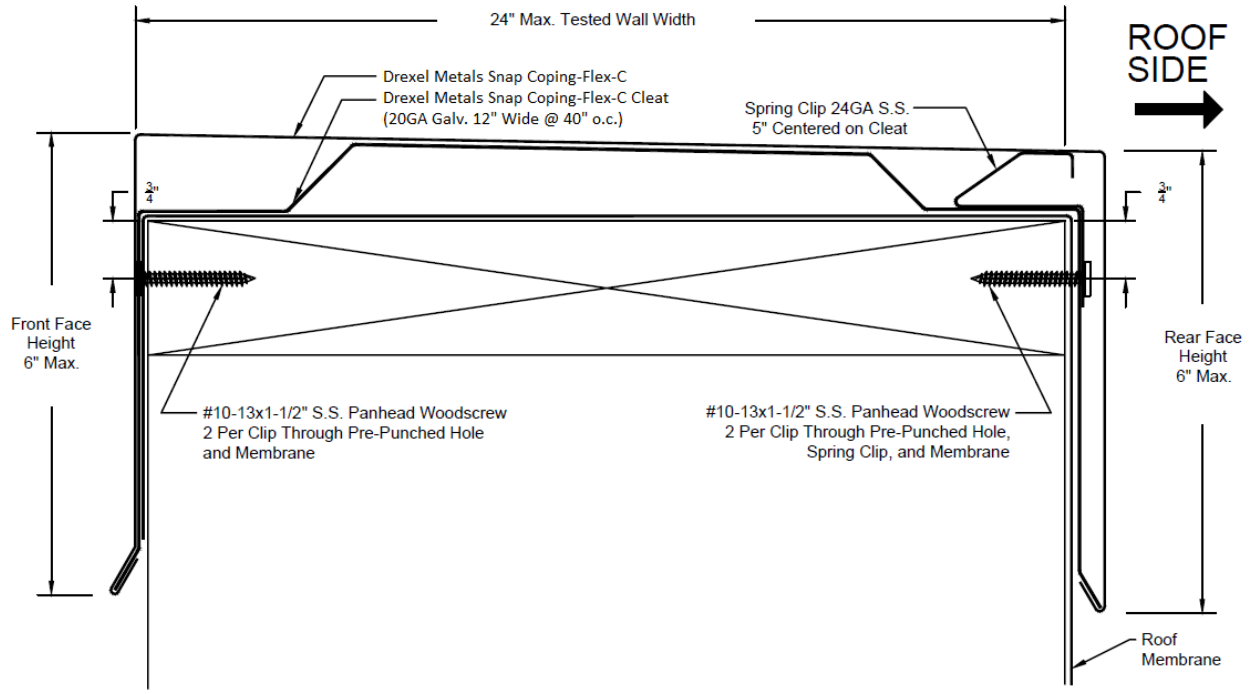

Maximum Parapet Heights for Flat Roofs
Slopes ≤ 1.4:12

Exposure	Basic Wind Speed (mph)								
	105	110	115	120	125	130	135	140	145
Perimeter - Zone 2/Zone 4									
B	NA	NA	NA	NA	NA	NA	NA	NA	NA
C	NA	NA	NA	NA	NA	NA	NA	NA	NA
D	NA	NA	NA	NA	NA	NA	NA	NA	NA
Corner - Zone 3/Zone 5									
B	NA	NA	NA	NA	NA	NA	NA	NA	NA
C	NA	NA	NA	NA	NA	NA	NA	NA	NA
D	NA	NA	NA	NA	NA	NA	NA	NA	NA

Notes: 1) Exposure category for the structure location shall be as defined in the Florida Building Code 2) Limitations are based on the exposed area of 10ft^2 or less 3) Topographic factors such as escarpments or hills are not included in the above assessment 4) Applicable for Enclosed Buildings without overhangs 5) NA = "Not Allowed" 6) K_d = 1.00; K_e = 1.00 7) Projects with parapet heights greater than 60 ft shall be evaluated by a licensed design professional 8) V_{ult} is shown in the above table. Design pressures are calculated using $V_{asd} = V_{ult}\sqrt{0.6}$ per 1609.3.1.

This evaluation report is provided for State of Florida product approval under Rule 61G20-3. The manufacturer shall notify CREEK Technical Services, LLC of any product changes or quality assurance changes throughout the duration for which this report is valid. This evaluation report does not express nor imply warranty, installation, recommended use, or other product attributes that are not specifically addressed herein.

Snap Coping Max (Min. 0.040" Aluminum)	
Substrate:	Min. No. 2 SPF wood lumber; Alternate substrates shall be evaluated by a licensed design professional.
Coping System:	Components shall be installed as shown below. The maximum parapet wall width shall be 32-inches. The maximum cleat spacing shall be 40-inch o.c.
Maximum Design Pressures (*Pressure calculated using 2:1 margin of safety per 1504.9*)	
Horizontal load on front leg:	**-15 psf**
Vertical load on top leg:	**-25psf**
Horizontal load on back leg:	**-15 psf**

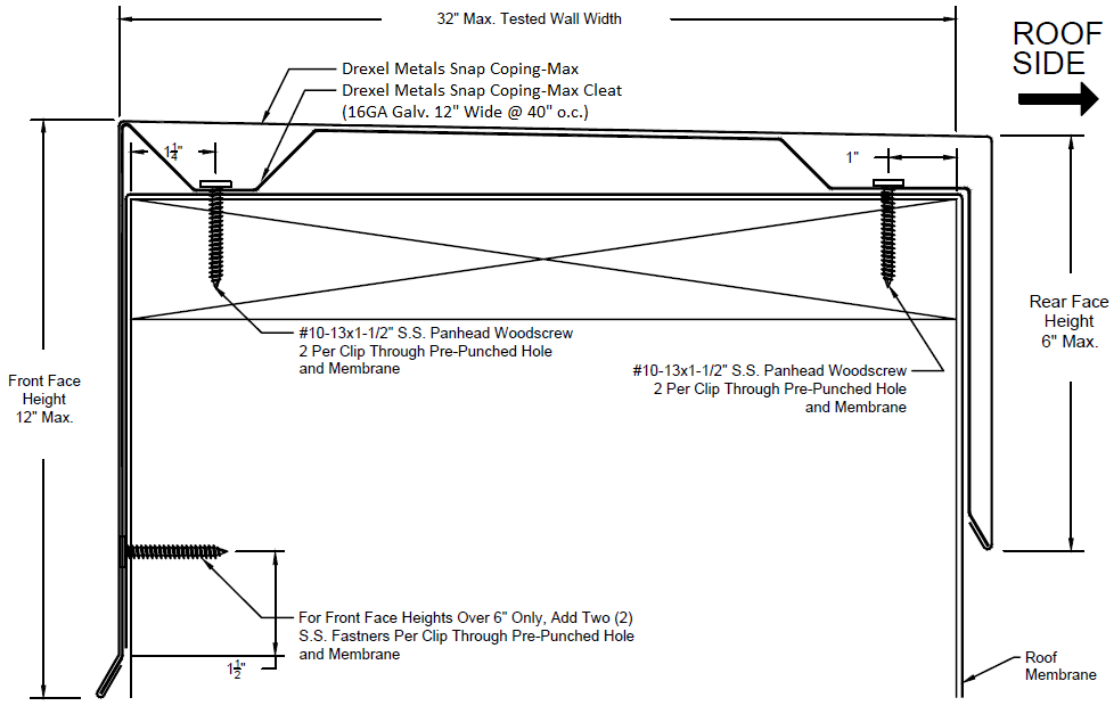

Maximum Parapet Heights for Flat Roofs
Slopes ≤ 1.4:12

Exposure	Basic Wind Speed (mph)								
	105	110	115	120	125	130	135	140	145
Perimeter - Zone 2/Zone 4									
B	NA	NA	NA	NA	NA	NA	NA	NA	NA
C	NA	NA	NA	NA	NA	NA	NA	NA	NA
D	NA	NA	NA	NA	NA	NA	NA	NA	NA
Corner - Zone 3/Zone 5									
B	NA	NA	NA	NA	NA	NA	NA	NA	NA
C	NA	NA	NA	NA	NA	NA	NA	NA	NA
D	NA	NA	NA	NA	NA	NA	NA	NA	NA

Notes: 1) Exposure category for the structure location shall be as defined in the Florida Building Code 2) Limitations are based on the exposed area of 10ft^2 or less 3) Topographic factors such as escarpments or hills are not included in the above assessment 4) Applicable for Enclosed Buildings without overhangs 5) NA = "Not Allowed" 6) K_d = 1.00; K_e = 1.00 7) Projects with parapet heights greater than 60 ft shall be evaluated by a licensed design professional 8) V_{ult} is shown in the above table. Design pressures are calculated using $V_{asd} = V_{ult}\sqrt{0.6}$ per 1609.3.1.

This evaluation report is provided for State of Florida product approval under Rule 61G20-3. The manufacturer shall notify CREEK Technical Services, LLC of any product changes or quality assurance changes throughout the duration for which this report is valid. This evaluation report does not express nor imply warranty, installation, recommended use, or other product attributes that are not specifically addressed herein.

Snap Coping Max (Min. 24 ga. Steel)	
Substrate:	Min. No. 2 SPF wood lumber; Alternate substrates shall be evaluated by a licensed design professional.
Coping System:	Components shall be installed as shown below. The maximum parapet wall width shall be 32-inches. The maximum cleat spacing shall be 40-inch o.c.
Maximum Design Pressures (*Pressure calculated using 2:1 margin of safety per 1504.9*)	
Horizontal load on front leg:	**-15 psf**
Vertical load on top leg:	**-12.5 psf**
Horizontal load on back leg:	**-7.5 psf**

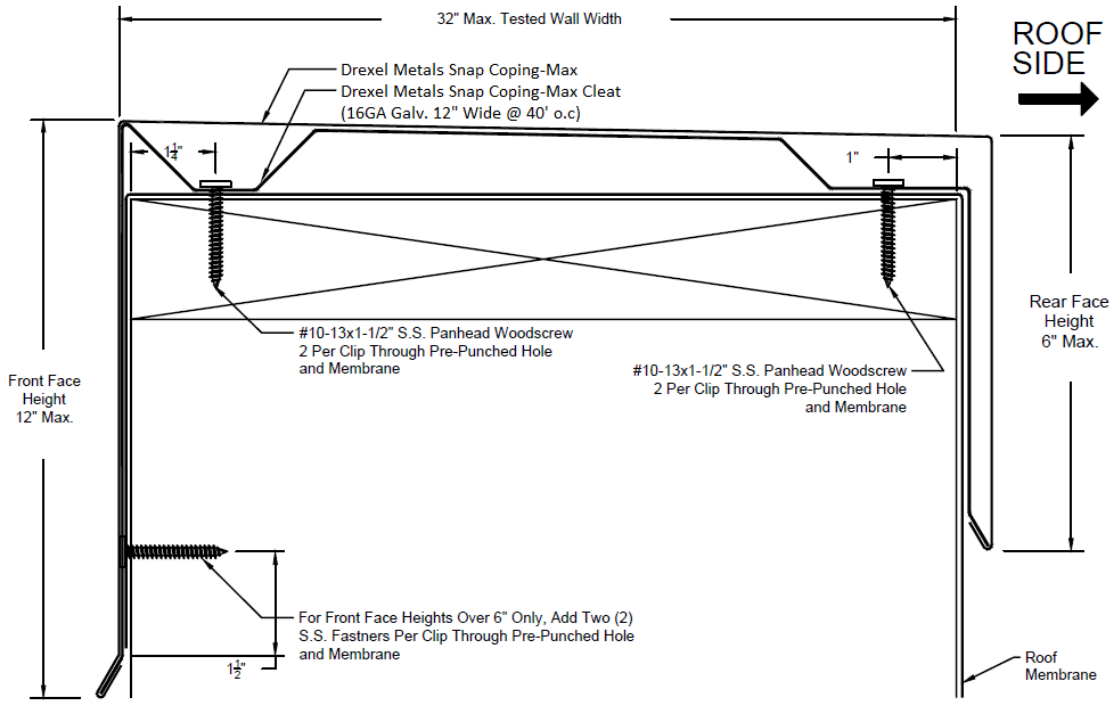

Maximum Parapet Heights for Flat Roofs
Slopes ≤ 1.4:12

Exposure	Basic Wind Speed (mph)								
	105	110	115	120	125	130	135	140	145
Perimeter - Zone 2/Zone 4									
B	NA	NA	NA	NA	NA	NA	NA	NA	NA
C	NA	NA	NA	NA	NA	NA	NA	NA	NA
D	NA	NA	NA	NA	NA	NA	NA	NA	NA
Corner - Zone 3/Zone 5									
B	NA	NA	NA	NA	NA	NA	NA	NA	NA
C	NA	NA	NA	NA	NA	NA	NA	NA	NA
D	NA	NA	NA	NA	NA	NA	NA	NA	NA

Notes: 1) Exposure category for the structure location shall be as defined in the Florida Building Code 2) Limitations are based on the exposed area of 10ft^2 or less 3) Topographic factors such as escarpments or hills are not included in the above assessment 4) Applicable for Enclosed Buildings without overhangs 5) NA = "Not Allowed" 6) K_d = 1.00; K_e = 1.00 7) Projects with parapet heights greater than 60 ft shall be evaluated by a licensed design professional 8) V_{ult} is shown in the above table. Design pressures are calculated using $V_{asd} = V_{ult}\sqrt{0.6}$ per 1609.3.1.

This evaluation report is provided for State of Florida product approval under Rule 61G20-3. The manufacturer shall notify CREEK Technical Services, LLC of any product changes or quality assurance changes throughout the duration for which this report is valid. This evaluation report does not express nor imply warranty, installation, recommended use, or other product attributes that are not specifically addressed herein.

Snap Coping Max-C (Min. 0.040" Aluminum)	
Substrate:	Min. No. 2 SPF wood lumber; Alternate substrates shall be evaluated by a licensed design professional.
Coping System:	Components shall be installed as shown below. The maximum parapet wall width shall be 32-inches. The maximum cleat spacing shall be 40-inch o.c.
Maximum Design Pressures (*Pressure calculated using 2:1 margin of safety per 1504.9*)	
Horizontal load on front leg:	**-22.5 psf**
Vertical load on top leg:	**-25psf**
Horizontal load on back leg:	**-15 psf**

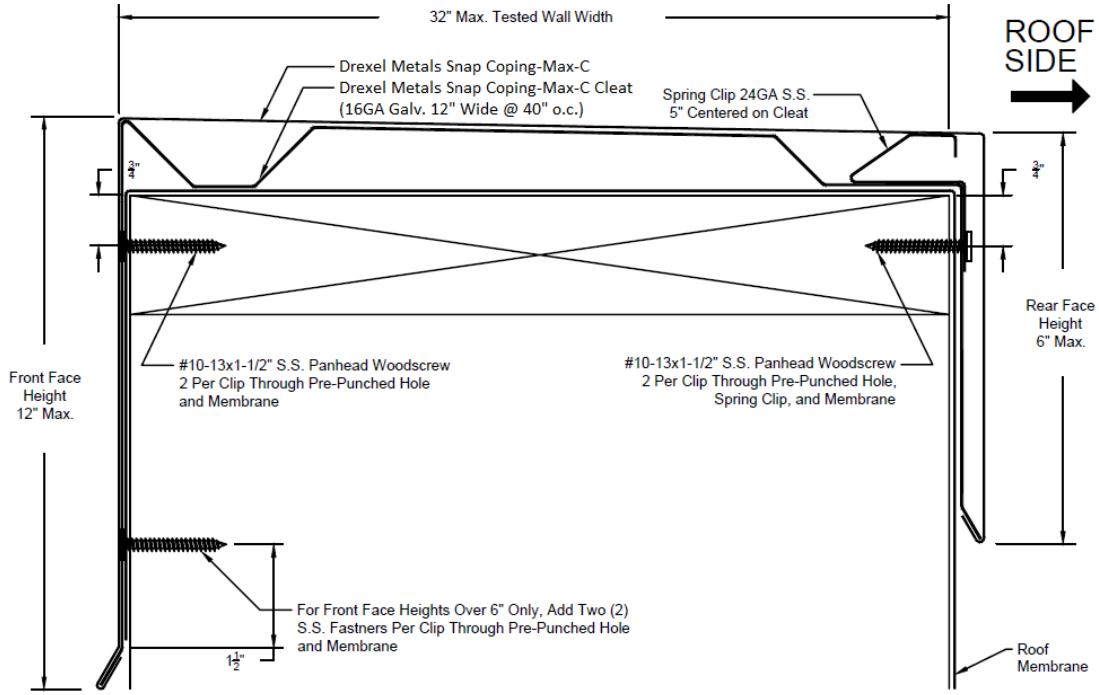

Maximum Parapet Heights for Flat Roofs
Slopes ≤ 1.4:12

Exposure	Basic Wind Speed (mph)								
	105	110	115	120	125	130	135	140	145
Perimeter - Zone 2/Zone 4									
B	NA	NA	NA	NA	NA	NA	NA	NA	NA
C	NA	NA	NA	NA	NA	NA	NA	NA	NA
D	NA	NA	NA	NA	NA	NA	NA	NA	NA
Corner - Zone 3/Zone 5									
B	NA	NA	NA	NA	NA	NA	NA	NA	NA
C	NA	NA	NA	NA	NA	NA	NA	NA	NA
D	NA	NA	NA	NA	NA	NA	NA	NA	NA

Notes: 1) Exposure category for the structure location shall be as defined in the Florida Building Code 2) Limitations are based on the exposed area of 10ft^2 or less 3) Topographic factors such as escarpments or hills are not included in the above assessment 4) Applicable for Enclosed Buildings without overhangs 5) NA = "Not Allowed" 6) K_d = 1.00; K_e = 1.00 7) Projects with parapet heights greater than 60 ft shall be evaluated by a licensed design professional 8) V_{ult} is shown in the above table. Design pressures are calculated using $V_{asd} = V_{ult}\sqrt{0.6}$ per 1609.3.1.

This evaluation report is provided for State of Florida product approval under Rule 61G20-3. The manufacturer shall notify CREEK Technical Services, LLC of any product changes or quality assurance changes throughout the duration for which this report is valid. This evaluation report does not express nor imply warranty, installation, recommended use, or other product attributes that are not specifically addressed herein.

Snap Coping Max-C (Min. 24 ga. Steel)	
Substrate:	Min. No. 2 SPF wood lumber; Alternate substrates shall be evaluated by a licensed design professional.
Coping System:	Components shall be installed as shown below. The maximum parapet wall width shall be 32-inches. The maximum cleat spacing shall be 40-inch o.c.
Maximum Design Pressures (*Pressure calculated using 2:1 margin of safety per 1504.9*)	
Horizontal load on front leg:	**-22.5 psf**
Vertical load on top leg:	**-37.5 psf**
Horizontal load on back leg:	**-22.5 psf**

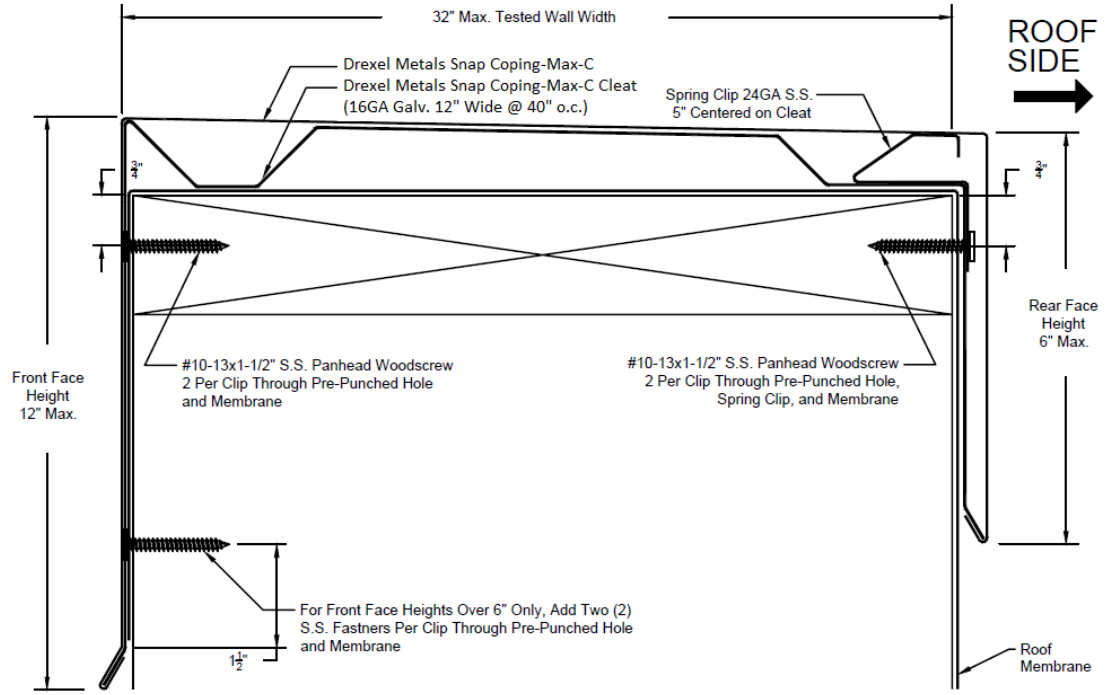

Maximum Parapet Heights for Flat Roofs
Slopes ≤ 1.4:12

Exposure	Basic Wind Speed (mph)								
	105	110	115	120	125	130	140	150	160
Perimeter - Zone 2/Zone 4									
B	NA	NA	NA	NA	NA	NA	NA	NA	NA
C	NA	NA	NA	NA	NA	NA	NA	NA	NA
D	NA	NA	NA	NA	NA	NA	NA	NA	NA
Corner - Zone 3/Zone 5									
B	NA	NA	NA	NA	NA	NA	NA	NA	NA
C	NA	NA	NA	NA	NA	NA	NA	NA	NA
D	NA	NA	NA	NA	NA	NA	NA	NA	NA

Notes: 1) Exposure category for the structure location shall be as defined in the Florida Building Code 2) Limitations are based on the exposed area of 10ft^2 or less 3) Topographic factors such as escarpments or hills are not included in the above assessment 4) Applicable for Enclosed Buildings without overhangs 5) NA = "Not Allowed" 6) K_d = 1.00; K_e = 1.00 7) Projects with parapet heights greater than 60 ft shall be evaluated by a licensed design professional 8) V_{ult} is shown in the above table. Design pressures are calculated using $V_{asd} = V_{ult}\sqrt{0.6}$ per 1609.3.1.

This evaluation report is provided for State of Florida product approval under Rule 61G20-3. The manufacturer shall notify CREEK Technical Services, LLC of any product changes or quality assurance changes throughout the duration for which this report is valid. This evaluation report does not express nor imply warranty, installation, recommended use, or other product attributes that are not specifically addressed herein.

Econo Gravel Stop (Min. 24 ga. Steel)	
Substrate:	Min. No. 2 SPF wood lumber; Alternate substrates shall be evaluated by a licensed design professional.
Drip Edge System:	Components shall be installed as shown below. The maximum fastener spacing shall be 12-inch o.c.
Maximum Design Pressure (*Pressure calculated using 2:1 margin of safety per 1504.9*)	
Horizontal load on front leg:	**-155 psf**

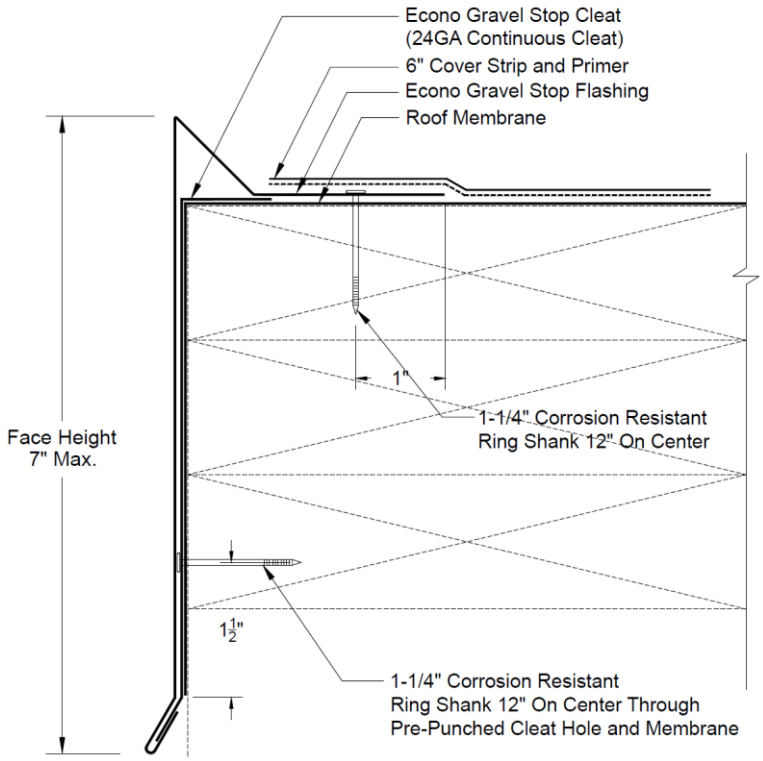

Maximum Roof Heights for Flat Roofs
Slopes ≤ 1.4:12

Exposure	Basic Wind Speed (mph)								
	150	160	170	180	190	200	210	230	250
Perimeter - Zone 4									
B	60 ft	60 ft	60 ft	60 ft	60 ft	60 ft	60 ft	60 ft	60 ft
C	60 ft	60 ft	60 ft	60 ft	60 ft	60 ft	60 ft	60 ft	60 ft
D	60 ft	60 ft	60 ft	60 ft	60 ft	60 ft	60 ft	60 ft	48 ft
Corner - Zone 5									
B	60 ft	60 ft	60 ft	60 ft	60 ft	60 ft	60 ft	60 ft	60 ft
C	60 ft	60 ft	60 ft	60 ft	60 ft	60 ft	60 ft	52 ft	19 ft
D	60 ft	60 ft	60 ft	60 ft	60 ft	60 ft	60 ft	22 ft	NA

Notes: 1) Exposure category for the structure location shall be as defined in the Florida Building Code 2) Limitations are based on the exposed area of $10ft^2$ or less 3) Topographic factors such as escarpments or hills are not included in the above assessment 4) Applicable for Enclosed Buildings without overhangs 5) NA = "Not Allowed" 6) K_d = 1.00; K_e = 1.00 7) Projects with roof heights greater than 60 ft shall be evaluated by a licensed design professional 8) V_{ult} is shown in the above table. Design pressures are calculated using $V_{asd} = V_{ult}\sqrt{0.6}$ per 1609.3.1.

This evaluation report is provided for State of Florida product approval under Rule 61G20-3. The manufacturer shall notify CREEK Technical Services, LLC of any product changes or quality assurance changes throughout the duration for which this report is valid. This evaluation report does not express nor imply warranty, installation, recommended use, or other product attributes that are not specifically addressed herein.

Econo Gravel Stop (Min. 0.032" Aluminum)	
Substrate:	Min. No. 2 SPF wood lumber; Alternate substrates shall be evaluated by a licensed design professional.
Drip Edge System:	Components shall be installed as shown below. The maximum fastener spacing shall be 12-inch o.c.
Maximum Design Pressure (*Pressure calculated using 2:1 margin of safety per 1504.9*)	
Horizontal load on front leg:	**-130 psf**

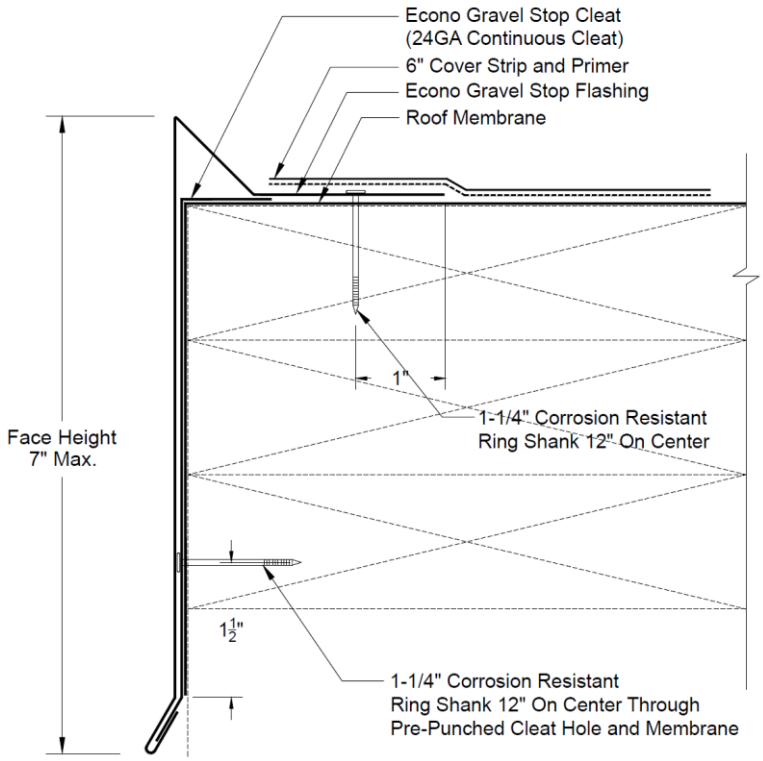

Maximum Roof Heights for Flat Roofs
Slopes ≤ 1.4:12

Exposure	Basic Wind Speed (mph)								
	150	160	170	180	190	200	210	230	250
Perimeter - Zone 4									
B	60 ft	60 ft	60 ft	60 ft	60 ft	60 ft	60 ft	60 ft	60 ft
C	60 ft	60 ft	60 ft	60 ft	60 ft	60 ft	60 ft	60 ft	42 ft
D	60 ft	60 ft	60 ft	60 ft	60 ft	60 ft	60 ft	45 ft	17 ft
Corner - Zone 5									
B	60 ft	60 ft	60 ft	60 ft	60 ft	60 ft	60 ft	60 ft	60 ft
C	60 ft	60 ft	60 ft	60 ft	60 ft	60 ft	60 ft	34 ft	15 ft
D	60 ft	60 ft	60 ft	60 ft	60 ft	60 ft	38 ft	NA	NA

Notes: 1) Exposure category for the structure location shall be as defined in the Florida Building Code 2) Limitations are based on the exposed area of $10ft^2$ or less 3) Topographic factors such as escarpments or hills are not included in the above assessment 4) Applicable for Enclosed Buildings without overhangs 5) NA = "Not Allowed" 6) K_d = 1.00; K_e = 1.00 7) Projects with roof heights greater than 60 ft shall be evaluated by a licensed design professional 8) V_{ult} is shown in the above table. Design pressures are calculated using $V_{asd} = V_{ult}\sqrt{0.6}$ per 1609.3.1.

This evaluation report is provided for State of Florida product approval under Rule 61G20-3. The manufacturer shall notify CREEK Technical Services, LLC of any product changes or quality assurance changes throughout the duration for which this report is valid. This evaluation report does not express nor imply warranty, installation, recommended use, or other product attributes that are not specifically addressed herein.

Drip Edge LT (Min. 0.040" Aluminum)	
Substrate:	Min. No. 2 SPF wood lumber; Alternate substrates shall be evaluated by a licensed design professional.
Drip Edge System:	Components shall be installed as shown below. The maximum fastener spacing shall be 12-inch o.c.
Maximum Design Pressure (*Pressure calculated using 2:1 margin of safety per 1504.9*)	
Horizontal load on front leg:	**-125 psf**

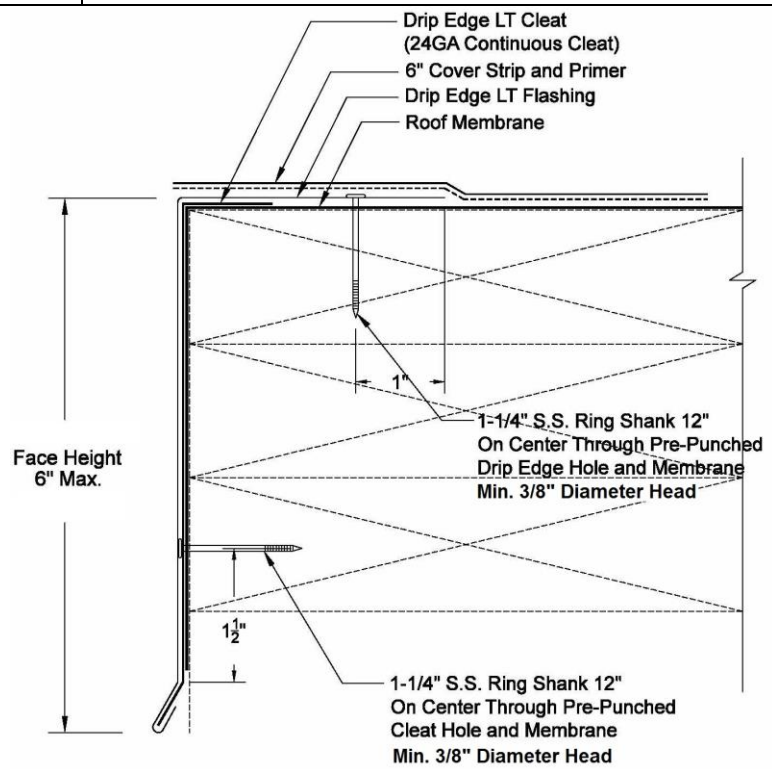

Maximum Roof Heights for Flat Roofs
Slopes ≤ 1.4:12

Exposure	Basic Wind Speed (mph)								
	150	160	170	180	190	200	210	230	250
Perimeter - Zone 4									
B	60 ft	60 ft	60 ft	60 ft	60 ft	60 ft	60 ft	60 ft	60 ft
C	60 ft	60 ft	60 ft	60 ft	60 ft	60 ft	60 ft	60 ft	35 ft
D	60 ft	60 ft	60 ft	60 ft	60 ft	60 ft	60 ft	36 ft	NA
Corner - Zone 5									
B	60 ft	60 ft	60 ft	60 ft	60 ft	60 ft	60 ft	60 ft	53 ft
C	60 ft	60 ft	60 ft	60 ft	60 ft	60 ft	60 ft	28 ft	NA
D	60 ft	60 ft	60 ft	60 ft	60 ft	54 ft	30 ft	NA	NA

Notes: 1) Exposure category for the structure location shall be as defined in the Florida Building Code 2) Limitations are based on the exposed area of $10ft^2$ or less 3) Topographic factors such as escarpments or hills are not included in the above assessment 4) Applicable for Enclosed Buildings without overhangs 5) NA = "Not Allowed" 6) K_d = 1.00; K_e = 1.00 7) Projects with roof heights greater than 60 ft shall be evaluated by a licensed design professional 8) V_{ult} is shown in the above table. Design pressures are calculated using $V_{asd} = V_{ult}\sqrt{0.6}$ per 1609.3.1.

This evaluation report is provided for State of Florida product approval under Rule 61G20-3. The manufacturer shall notify CREEK Technical Services, LLC of any product changes or quality assurance changes throughout the duration for which this report is valid. This evaluation report does not express nor imply warranty, installation, recommended use, or other product attributes that are not specifically addressed herein.

Drip Edge LT (Min. 24 ga. Steel)	
Substrate:	Min. No. 2 SPF wood lumber; Alternate substrates shall be evaluated by a licensed design professional.
Drip Edge System:	Components shall be installed as shown below. The maximum fastener spacing shall be 12-inch o.c.
Maximum Design Pressure (*Pressure calculated using 2:1 margin of safety per 1504.9*)	
Horizontal load on front leg:	**-120 psf**

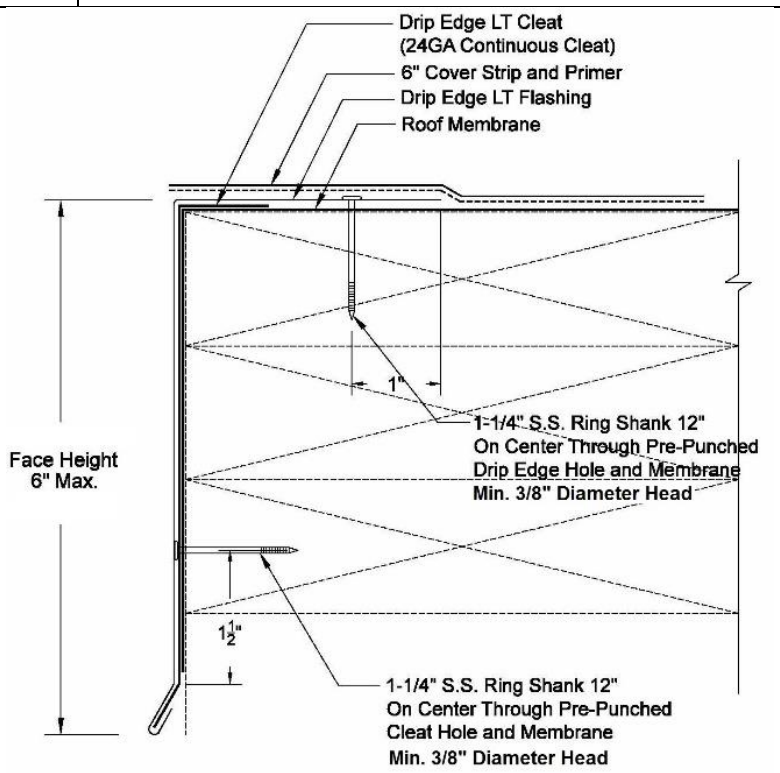

Maximum Roof Heights for Flat Roofs
Slopes ≤ 1.4:12

Exposure	Basic Wind Speed (mph)								
	150	160	170	180	190	200	210	230	250
Perimeter - Zone 4									
B	60 ft	60 ft	60 ft	60 ft	60 ft	60 ft	60 ft	60 ft	60 ft
C	60 ft	60 ft	60 ft	60 ft	60 ft	60 ft	60 ft	60 ft	29 ft
D	60 ft	60 ft	60 ft	60 ft	60 ft	60 ft	60 ft	28 ft	NA
Corner - Zone 5									
B	60 ft	60 ft	60 ft	60 ft	60 ft	60 ft	60 ft	60 ft	45 ft
C	60 ft	60 ft	60 ft	60 ft	60 ft	60 ft	56 ft	23 ft	NA
D	60 ft	60 ft	60 ft	60 ft	60 ft	42 ft	24 ft	NA	NA

Notes: 1) Exposure category for the structure location shall be as defined in the Florida Building Code 2) Limitations are based on the exposed area of $10ft^2$ or less 3) Topographic factors such as escarpments or hills are not included in the above assessment 4) Applicable for Enclosed Buildings without overhangs 5) NA = "Not Allowed" 6) K_d = 1.00; K_e = 1.00 7) Projects with roof heights greater than 60 ft shall be evaluated by a licensed design professional 8) V_{ult} is shown in the above table. Design pressures are calculated using $V_{asd} = V_{ult}\sqrt{0.6}$ per 1609.3.1.

This evaluation report is provided for State of Florida product approval under Rule 61G20-3. The manufacturer shall notify CREEK Technical Services, LLC of any product changes or quality assurance changes throughout the duration for which this report is valid. This evaluation report does not express nor imply warranty, installation, recommended use, or other product attributes that are not specifically addressed herein.

Fascia Cover EC (Min. 0.032" Aluminum)	
Substrate:	Min. No. 2 SPF wood lumber; Alternate substrates shall be evaluated by a licensed design professional.
Fascia System:	Components shall be installed as shown below. The maximum fastener spacing shall be 12-inch o.c.
Maximum Design Pressure (*Pressure calculated using 2:1 margin of safety per 1504.9*)	
Horizontal load on front leg:	**-215 psf**

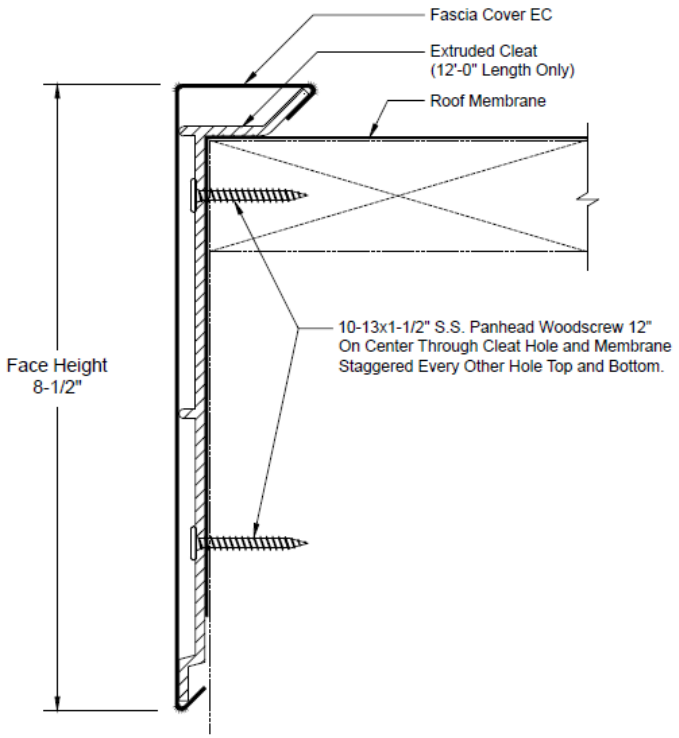

Maximum Roof Heights for Flat Roofs
Slopes ≤ 1.4:12

Exposure	Basic Wind Speed (mph)								
	150	160	170	180	190	200	210	230	250
Perimeter - Zone 4									
B	60 ft	60 ft	60 ft	60 ft	60 ft	60 ft	60 ft	60 ft	60 ft
C	60 ft	60 ft	60 ft	60 ft	60 ft	60 ft	60 ft	60 ft	60 ft
D	60 ft	60 ft	60 ft	60 ft	60 ft	60 ft	60 ft	60 ft	60 ft
Corner - Zone 5									
B	60 ft	60 ft	60 ft	60 ft	60 ft	60 ft	60 ft	60 ft	60 ft
C	60 ft	60 ft	60 ft	60 ft	60 ft	60 ft	60 ft	60 ft	60 ft
D	60 ft	60 ft	60 ft	60 ft	60 ft	60 ft	60 ft	60 ft	60 ft

Notes: 1) Exposure category for the structure location shall be as defined in the Florida Building Code 2) Limitations are based on the exposed area of $10ft^2$ or less 3) Topographic factors such as escarpments or hills are not included in the above assessment 4) Applicable for Enclosed Buildings without overhangs 5) NA = "Not Allowed" 6) K_d = 1.00; K_e = 1.00 7) Projects with roof heights greater than 60 ft shall be evaluated by a licensed design professional 8) V_{ult} is shown in the above table. Design pressures are calculated using $V_{asd} = V_{ult}\sqrt{0.6}$ per 1609.3.1.

This evaluation report is provided for State of Florida product approval under Rule 61G20-3. The manufacturer shall notify CREEK Technical Services, LLC of any product changes or quality assurance changes throughout the duration for which this report is valid. This evaluation report does not express nor imply warranty, installation, recommended use, or other product attributes that are not specifically addressed herein.

Fascia Cover EC (Min. 0.040" Aluminum)	
Substrate:	Min. No. 2 SPF wood lumber; Alternate substrates shall be evaluated by a licensed design professional.
Fascia System:	Components shall be installed as shown below. The maximum fastener spacing shall be 12-inch o.c.
Maximum Design Pressure (*Pressure calculated using 2:1 margin of safety per 1504.9*)	
Horizontal load on front leg:	**-170 psf**

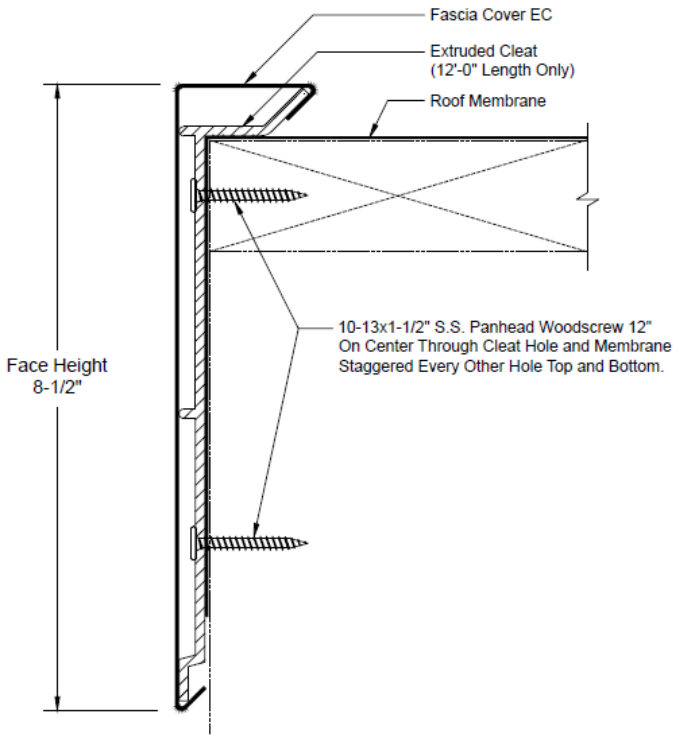

Maximum Roof Heights for Flat Roofs
Slopes ≤ 1.4:12

Exposure	Basic Wind Speed (mph)								
	150	160	170	180	190	200	210	230	250
Perimeter - Zone 4									
B	60 ft	60 ft	60 ft	60 ft	60 ft	60 ft	60 ft	60 ft	60 ft
C	60 ft	60 ft	60 ft	60 ft	60 ft	60 ft	60 ft	60 ft	60 ft
D	60 ft	60 ft	60 ft	60 ft	60 ft	60 ft	60 ft	60 ft	60 ft
Corner - Zone 5									
B	60 ft	60 ft	60 ft	60 ft	60 ft	60 ft	60 ft	60 ft	60 ft
C	60 ft	60 ft	60 ft	60 ft	60 ft	60 ft	60 ft	60 ft	56 ft
D	60 ft	60 ft	60 ft	60 ft	60 ft	60 ft	60 ft	60 ft	24 ft

Notes: 1) Exposure category for the structure location shall be as defined in the Florida Building Code 2) Limitations are based on the exposed area of $10ft^2$ or less 3) Topographic factors such as escarpments or hills are not included in the above assessment 4) Applicable for Enclosed Buildings without overhangs 5) NA = "Not Allowed" 6) K_d = 1.00; K_e = 1.00 7) Projects with roof heights greater than 60 ft shall be evaluated by a licensed design professional 8) V_{ult} is shown in the above table. Design pressures are calculated using $V_{asd} = V_{ult}\sqrt{0.6}$ per 1609.3.1.

This evaluation report is provided for State of Florida product approval under Rule 61G20-3. The manufacturer shall notify CREEK Technical Services, LLC of any product changes or quality assurance changes throughout the duration for which this report is valid. This evaluation report does not express nor imply warranty, installation, recommended use, or other product attributes that are not specifically addressed herein.

Fascia Cover EC (Min. 0.050" Aluminum)	
Substrate:	Min. No. 2 SPF wood lumber; Alternate substrates shall be evaluated by a licensed design professional.
Fascia System:	Components shall be installed as shown below. The maximum fastener spacing shall be 12-inch o.c.
Maximum Design Pressure (*Pressure calculated using 2:1 margin of safety per 1504.9*)	
Horizontal load on front leg:	**-80 psf**

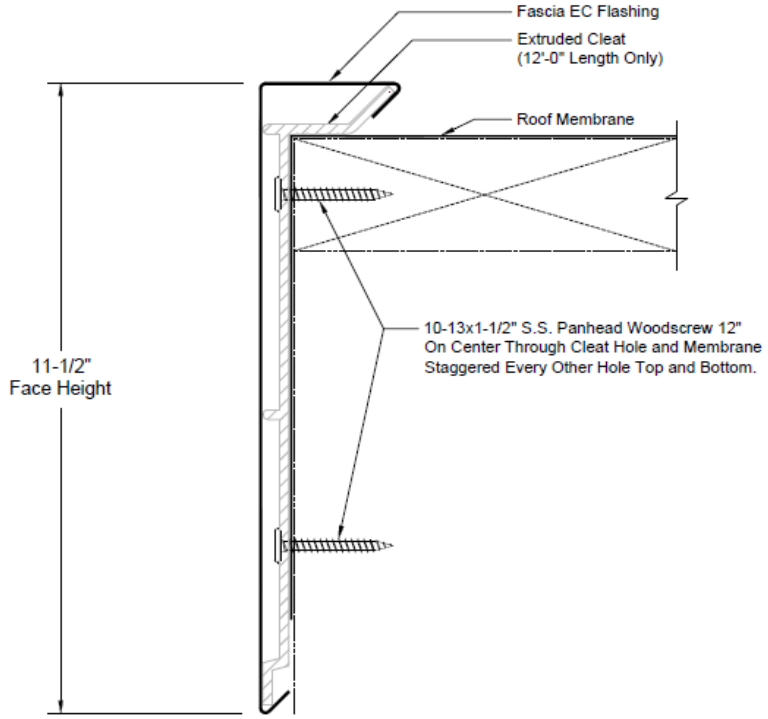

Maximum Roof Heights for Flat Roofs
Slopes ≤ 1.4:12

Exposure	Basic Wind Speed (mph)								
	110	120	130	140	150	160	170	180	190
Perimeter - Zone 4									
B	60 ft	60 ft	60 ft	60 ft	60 ft	60 ft	60 ft	60 ft	60 ft
C	60 ft	60 ft	60 ft	60 ft	60 ft	60 ft	60 ft	60 ft	56 ft
D	60 ft	60 ft	60 ft	60 ft	60 ft	60 ft	60 ft	46 ft	25 ft
Corner - Zone 5									
B	60 ft	60 ft	60 ft	60 ft	60 ft	60 ft	60 ft	60 ft	60 ft
C	60 ft	60 ft	60 ft	60 ft	60 ft	60 ft	60 ft	35 ft	21 ft
D	60 ft	60 ft	60 ft	60 ft	60 ft	52 ft	27 ft	NA	NA

Notes: 1) Exposure category for the structure location shall be as defined in the Florida Building Code 2) Limitations are based on the exposed area of $10ft^2$ or less 3) Topographic factors such as escarpments or hills are not included in the above assessment 4) Applicable for Enclosed Buildings without overhangs 5) NA = "Not Allowed" 6) K_d = 1.00; K_e = 1.00 7) Projects with roof heights greater than 60 ft shall be evaluated by a licensed design professional 8) V_{ult} is shown in the above table. Design pressures are calculated using $V_{asd} = V_{ult}\sqrt{0.6}$ per 1609.3.1.

This evaluation report is provided for State of Florida product approval under Rule 61G20-3. The manufacturer shall notify CREEK Technical Services, LLC of any product changes or quality assurance changes throughout the duration for which this report is valid. This evaluation report does not express nor imply warranty, installation, recommended use, or other product attributes that are not specifically addressed herein.

Fascia Cover EC (Min. 24 ga. Steel)	
Substrate:	Min. No. 2 SPF wood lumber; Alternate substrates shall be evaluated by a licensed design professional.
Fascia System:	Components shall be installed as shown below. The maximum fastener spacing shall be 12-inch o.c.
Maximum Design Pressure (*Pressure calculated using 2:1 margin of safety per 1504.9*)	
Horizontal load on front leg:	**-150 psf**

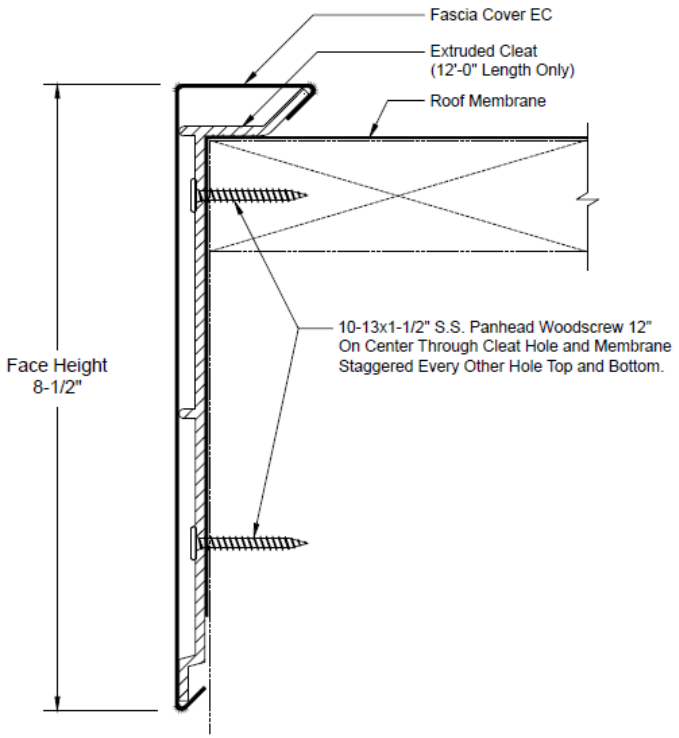

Maximum Roof Heights for Flat Roofs
Slopes ≤ 1.4:12

Exposure	Basic Wind Speed (mph)								
	150	160	170	180	190	200	210	230	250
Perimeter - Zone 4									
B	60 ft	60 ft	60 ft	60 ft	60 ft	60 ft	60 ft	60 ft	60 ft
C	60 ft	60 ft	60 ft	60 ft	60 ft	60 ft	60 ft	60 ft	60 ft
D	60 ft	60 ft	60 ft	60 ft	60 ft	60 ft	60 ft	60 ft	39 ft
Corner - Zone 5									
B	60 ft	60 ft	60 ft	60 ft	60 ft	60 ft	60 ft	60 ft	60 ft
C	60 ft	60 ft	60 ft	60 ft	60 ft	60 ft	60 ft	60 ft	31 ft
D	60 ft	60 ft	60 ft	60 ft	60 ft	60 ft	60 ft	30 ft	NA

Notes: 1) Exposure category for the structure location shall be as defined in the Florida Building Code 2) Limitations are based on the exposed area of $10ft^2$ or less 3) Topographic factors such as escarpments or hills are not included in the above assessment 4) Applicable for Enclosed Buildings without overhangs 5) NA = "Not Allowed" 6) K_d = 1.00; K_e = 1.00 7) Projects with roof heights greater than 60 ft shall be evaluated by a licensed design professional 8) V_{ult} is shown in the above table. Design pressures are calculated using $V_{asd} = V_{ult}\sqrt{0.6}$ per 1609.3.1.

This evaluation report is provided for State of Florida product approval under Rule 61G20-3. The manufacturer shall notify CREEK Technical Services, LLC of any product changes or quality assurance changes throughout the duration for which this report is valid. This evaluation report does not express nor imply warranty, installation, recommended use, or other product attributes that are not specifically addressed herein.

Fascia Cover EC (Min. 22 ga. Steel)	
Substrate:	Min. No. 2 SPF wood lumber; Alternate substrates shall be evaluated by a licensed design professional.
Fascia System:	Components shall be installed as shown below. The maximum fastener spacing shall be 12-inch o.c.
Maximum Design Pressure (*Pressure calculated using 2:1 margin of safety per 1504.9*)	
Horizontal load on front leg:	**-80 psf**

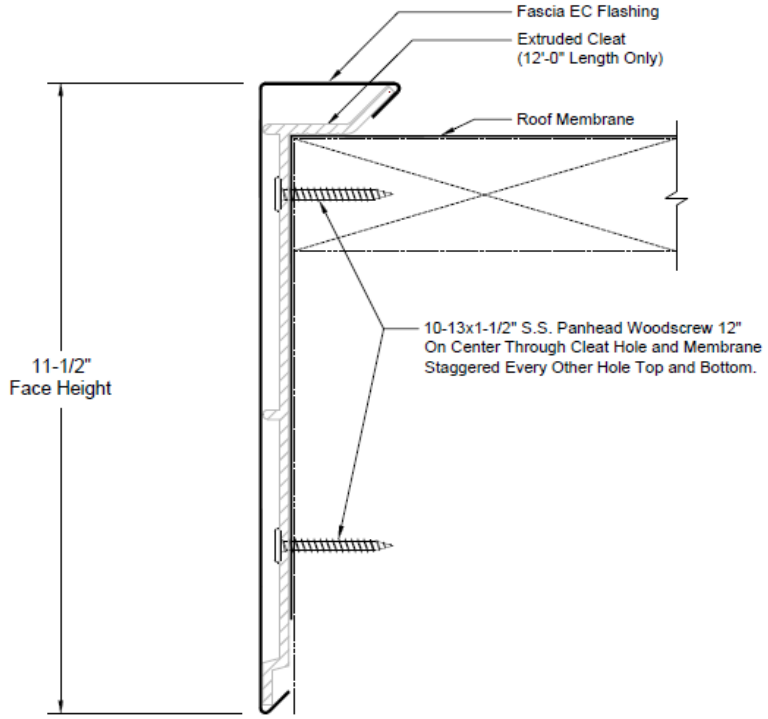

Maximum Roof Heights for Flat Roofs
Slopes ≤ 1.4:12

Exposure	Basic Wind Speed (mph)								
	110	120	130	140	150	160	170	180	190
Perimeter - Zone 4									
B	60 ft	60 ft	60 ft	60 ft	60 ft	60 ft	60 ft	60 ft	60 ft
C	60 ft	60 ft	60 ft	60 ft	60 ft	60 ft	60 ft	60 ft	56 ft
D	60 ft	60 ft	60 ft	60 ft	60 ft	60 ft	60 ft	46 ft	25 ft
Corner - Zone 5									
B	60 ft	60 ft	60 ft	60 ft	60 ft	60 ft	60 ft	60 ft	60 ft
C	60 ft	60 ft	60 ft	60 ft	60 ft	60 ft	60 ft	35 ft	21 ft
D	60 ft	60 ft	60 ft	60 ft	60 ft	52 ft	27 ft	NA	NA

Notes: 1) Exposure category for the structure location shall be as defined in the Florida Building Code 2) Limitations are based on the exposed area of 10ft^2 or less 3) Topographic factors such as escarpments or hills are not included in the above assessment 4) Applicable for Enclosed Buildings without overhangs 5) NA = "Not Allowed" 6) K_d = 1.00; K_e = 1.00 7) Projects with roof heights greater than 60 ft shall be evaluated by a licensed design professional 8) V_{ult} is shown in the above table. Design pressures are calculated using $V_{asd} = V_{ult}\sqrt{0.6}$ per 1609.3.1.

This evaluation report is provided for State of Florida product approval under Rule 61G20-3. The manufacturer shall notify CREEK Technical Services, LLC of any product changes or quality assurance changes throughout the duration for which this report is valid. This evaluation report does not express nor imply warranty, installation, recommended use, or other product attributes that are not specifically addressed herein.

Fascia Cover HD (Min. 0.040" Aluminum)	
Substrate:	Min. No. 2 SPF wood lumber; Alternate substrates shall be evaluated by a licensed design professional.
Fascia System:	Components shall be installed as shown below. The maximum fastener spacing shall be 12-inch o.c.
Maximum Design Pressure (*Pressure calculated using 2:1 margin of safety per 1504.9*)	
Horizontal load on front leg:	**-170 psf**

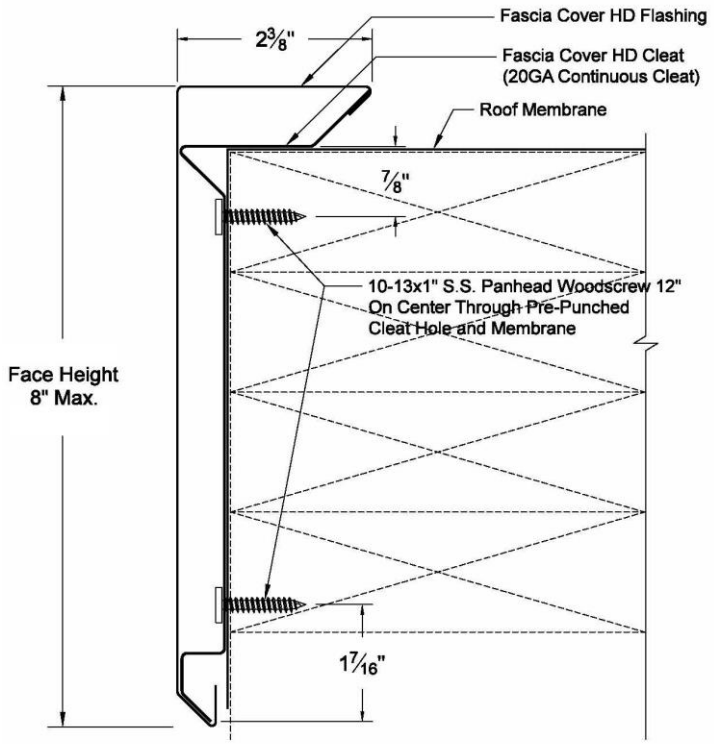

Maximum Roof Heights for Flat Roofs
Slopes ≤ 1.4:12

Exposure	Basic Wind Speed (mph)								
	150	160	170	180	190	200	210	230	250
Perimeter - Zone 4									
B	60 ft	60 ft	60 ft	60 ft	60 ft	60 ft	60 ft	60 ft	60 ft
C	60 ft	60 ft	60 ft	60 ft	60 ft	60 ft	60 ft	60 ft	60 ft
D	60 ft	60 ft	60 ft	60 ft	60 ft	60 ft	60 ft	60 ft	60 ft
Corner - Zone 5									
B	60 ft	60 ft	60 ft	60 ft	60 ft	60 ft	60 ft	60 ft	60 ft
C	60 ft	60 ft	60 ft	60 ft	60 ft	60 ft	60 ft	60 ft	56 ft
D	60 ft	60 ft	60 ft	60 ft	60 ft	60 ft	60 ft	60 ft	24 ft

Notes: 1) Exposure category for the structure location shall be as defined in the Florida Building Code 2) Limitations are based on the exposed area of $10ft^2$ or less 3) Topographic factors such as escarpments or hills are not included in the above assessment 4) Applicable for Enclosed Buildings without overhangs 5) NA = "Not Allowed" 6) K_d = 1.00; K_e = 1.00 7) Projects with roof heights greater than 60 ft shall be evaluated by a licensed design professional 8) V_{ult} is shown in the above table. Design pressures are calculated using $V_{asd} = V_{ult}\sqrt{0.6}$ per 1609.3.1.

This evaluation report is provided for State of Florida product approval under Rule 61G20-3. The manufacturer shall notify CREEK Technical Services, LLC of any product changes or quality assurance changes throughout the duration for which this report is valid. This evaluation report does not express nor imply warranty, installation, recommended use, or other product attributes that are not specifically addressed herein.

Fascia Cover HD (Min. 24 ga. Steel)	
Substrate:	Min. No. 2 SPF wood lumber; Alternate substrates shall be evaluated by a licensed design professional.
Fascia System:	Components shall be installed as shown below. The maximum fastener spacing shall be 12-inch o.c.
Maximum Design Pressure (*Pressure calculated using 2:1 margin of safety per 1504.9*)	
Horizontal load on front leg:	**-130 psf**

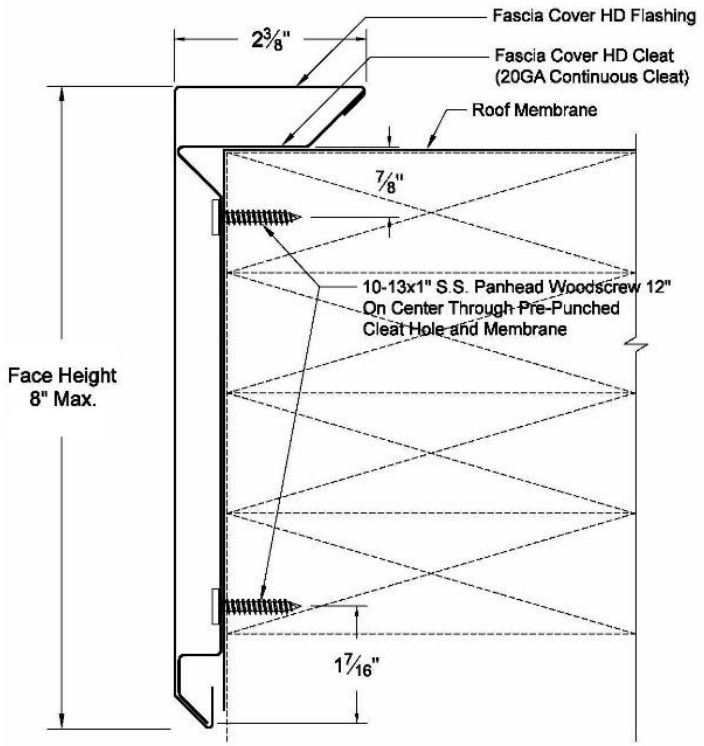

Maximum Roof Heights for Flat Roofs
Slopes ≤ 1.4:12

Exposure	Basic Wind Speed (mph)								
	150	160	170	180	190	200	210	230	250
Perimeter - Zone 4									
B	60 ft	60 ft	60 ft	60 ft	60 ft	60 ft	60 ft	60 ft	60 ft
C	60 ft	60 ft	60 ft	60 ft	60 ft	60 ft	60 ft	60 ft	42 ft
D	60 ft	60 ft	60 ft	60 ft	60 ft	60 ft	60 ft	45 ft	17 ft
Corner - Zone 5									
B	60 ft	60 ft	60 ft	60 ft	60 ft	60 ft	60 ft	60 ft	60 ft
C	60 ft	60 ft	60 ft	60 ft	60 ft	60 ft	60 ft	34 ft	15 ft
D	60 ft	60 ft	60 ft	60 ft	60 ft	60 ft	38 ft	NA	NA

Notes: 1) Exposure category for the structure location shall be as defined in the Florida Building Code 2) Limitations are based on the exposed area of $10ft^2$ or less 3) Topographic factors such as escarpments or hills are not included in the above assessment 4) Applicable for Enclosed Buildings without overhangs 5) NA = "Not Allowed" 6) K_d = 1.00; K_e = 1.00 7) Projects with roof heights greater than 60 ft shall be evaluated by a licensed design professional 8) V_{ult} is shown in the above table. Design pressures are calculated using $V_{asd} = V_{ult}\sqrt{0.6}$ per 1609.3.1.

This evaluation report is provided for State of Florida product approval under Rule 61G20-3. The manufacturer shall notify CREEK Technical Services, LLC of any product changes or quality assurance changes throughout the duration for which this report is valid. This evaluation report does not express nor imply warranty, installation, recommended use, or other product attributes that are not specifically addressed herein.

Fascia Cover LT (Min. 0.040" Aluminum)	
Substrate:	Min. No. 2 SPF wood lumber; Alternate substrates shall be evaluated by a licensed design professional.
Fascia System:	Components shall be installed as shown below. The maximum fastener spacing shall be 12-inch o.c.
Maximum Design Pressure (*Pressure calculated using 2:1 margin of safety per 1504.9*)	
Horizontal load on front leg:	**-90 psf**

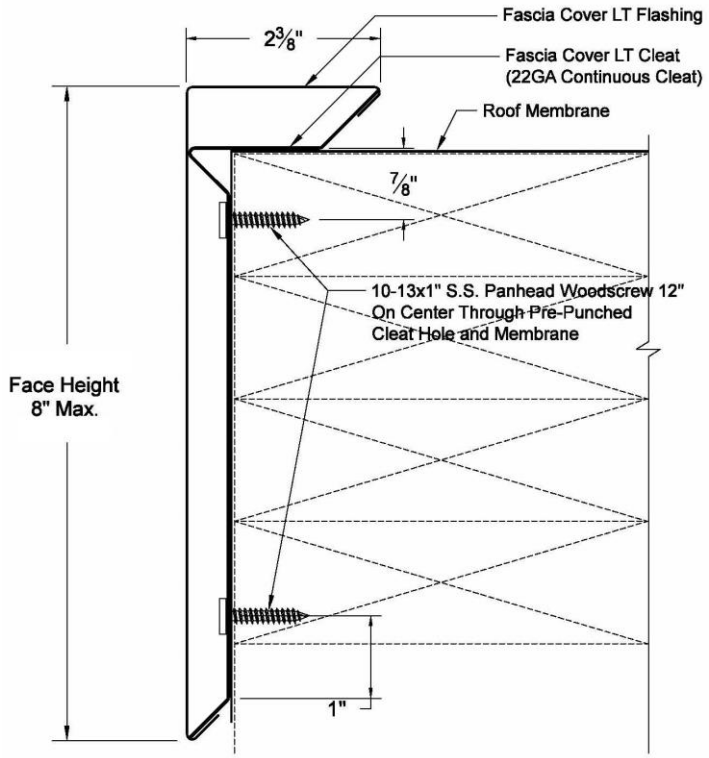

Maximum Roof Heights for Flat Roofs
Slopes ≤ 1.4:12

Exposure	Basic Wind Speed (mph)								
	120	130	140	150	160	170	180	190	200
Perimeter - Zone 4									
B	60 ft	60 ft	60 ft	60 ft	60 ft	60 ft	60 ft	60 ft	60 ft
C	60 ft	60 ft	60 ft	60 ft	60 ft	60 ft	60 ft	60 ft	60 ft
D	60 ft	60 ft	60 ft	60 ft	60 ft	60 ft	60 ft	40 ft	25 ft
Corner - Zone 5									
B	60 ft	60 ft	60 ft	60 ft	60 ft	60 ft	60 ft	60 ft	60 ft
C	60 ft	60 ft	60 ft	60 ft	60 ft	60 ft	60 ft	30 ft	20 ft
D	60 ft	60 ft	60 ft	60 ft	60 ft	50 ft	25 ft	NA	NA

Notes: 1) Exposure category for the structure location shall be as defined in the Florida Building Code 2) Limitations are based on the exposed area of $10ft^2$ or less 3) Topographic factors such as escarpments or hills are not included in the above assessment 4) Applicable for Enclosed Buildings without overhangs 5) NA = "Not Allowed" 6) K_d = 1.00; K_e = 1.00 7) Projects with roof heights greater than 60 ft shall be evaluated by a licensed design professional 8) V_{ult} is shown in the above table. Design pressures are calculated using $V_{asd} = V_{ult}\sqrt{0.6}$ per 1609.3.1.

This evaluation report is provided for State of Florida product approval under Rule 61G20-3. The manufacturer shall notify CREEK Technical Services, LLC of any product changes or quality assurance changes throughout the duration for which this report is valid. This evaluation report does not express nor imply warranty, installation, recommended use, or other product attributes that are not specifically addressed herein.

Fascia Cover LT (Min. 24 ga. Steel)	
Substrate:	Min. No. 2 SPF wood lumber; Alternate substrates shall be evaluated by a licensed design professional.
Fascia System:	Components shall be installed as shown below. The maximum fastener spacing shall be 12-inch o.c.
Maximum Design Pressure (*Pressure calculated using 2:1 margin of safety per 1504.9*)	
Horizontal load on front leg:	**-105 psf**

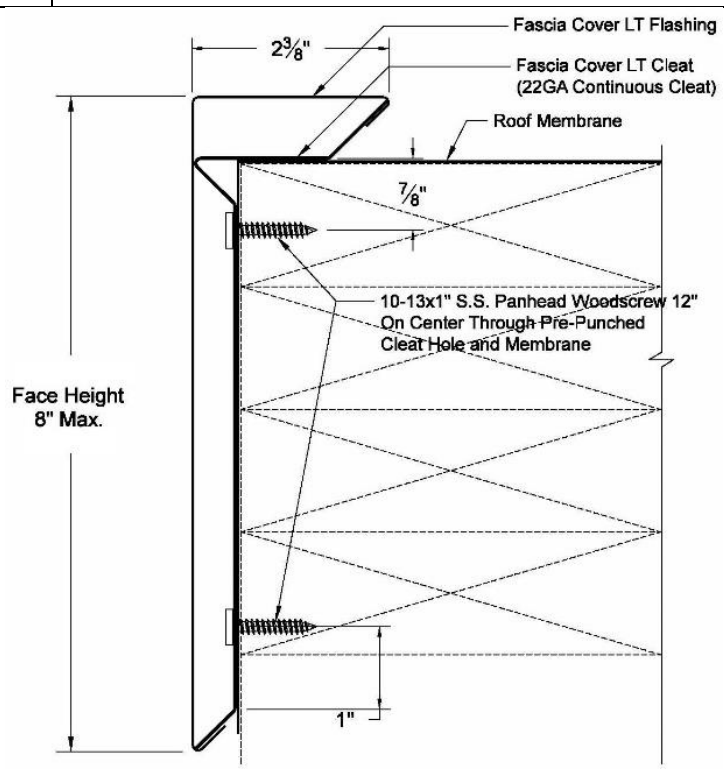

Maximum Roof Heights for Flat Roofs
Slopes ≤ 1.4:12

Exposure	Basic Wind Speed (mph)								
	120	130	140	150	160	170	180	190	200
Perimeter - Zone 4									
B	60 ft	60 ft	60 ft	60 ft	60 ft	60 ft	60 ft	60 ft	60 ft
C	60 ft	60 ft	60 ft	60 ft	60 ft	60 ft	60 ft	60 ft	60 ft
D	60 ft	60 ft	60 ft	60 ft	60 ft	60 ft	60 ft	60 ft	60 ft
Corner - Zone 5									
B	60 ft	60 ft	60 ft	60 ft	60 ft	60 ft	60 ft	60 ft	60 ft
C	60 ft	60 ft	60 ft	60 ft	60 ft	60 ft	60 ft	60 ft	40 ft
D	60 ft	60 ft	60 ft	60 ft	60 ft	60 ft	60 ft	30 ft	20 ft

Notes: 1) Exposure category for the structure location shall be as defined in the Florida Building Code 2) Limitations are based on the exposed area of $10ft^2$ or less 3) Topographic factors such as escarpments or hills are not included in the above assessment 4) Applicable for Enclosed Buildings without overhangs 5) NA = "Not Allowed" 6) K_d = 1.00; K_e = 1.00 7) Projects with roof heights greater than 60 ft shall be evaluated by a licensed design professional 8) V_{ult} is shown in the above table. Design pressures are calculated using $V_{asd} = V_{ult}\sqrt{0.6}$ per 1609.3.1.

This evaluation report is provided for State of Florida product approval under Rule 61G20-3. The manufacturer shall notify CREEK Technical Services, LLC of any product changes or quality assurance changes throughout the duration for which this report is valid. This evaluation report does not express nor imply warranty, installation, recommended use, or other product attributes that are not specifically addressed herein.

Snap Gravel Stop HD (Min. 0.040" Aluminum)	
Substrate:	Min. No. 2 SPF wood lumber; Alternate substrates shall be evaluated by a licensed design professional.
Gravel Stop System:	Components shall be installed as shown below. The maximum fastener spacing shall be 12-inch o.c.
Maximum Design Pressure (*Pressure calculated using 2:1 margin of safety per 1504.9*)	
Horizontal load on front leg:	**-105 psf**

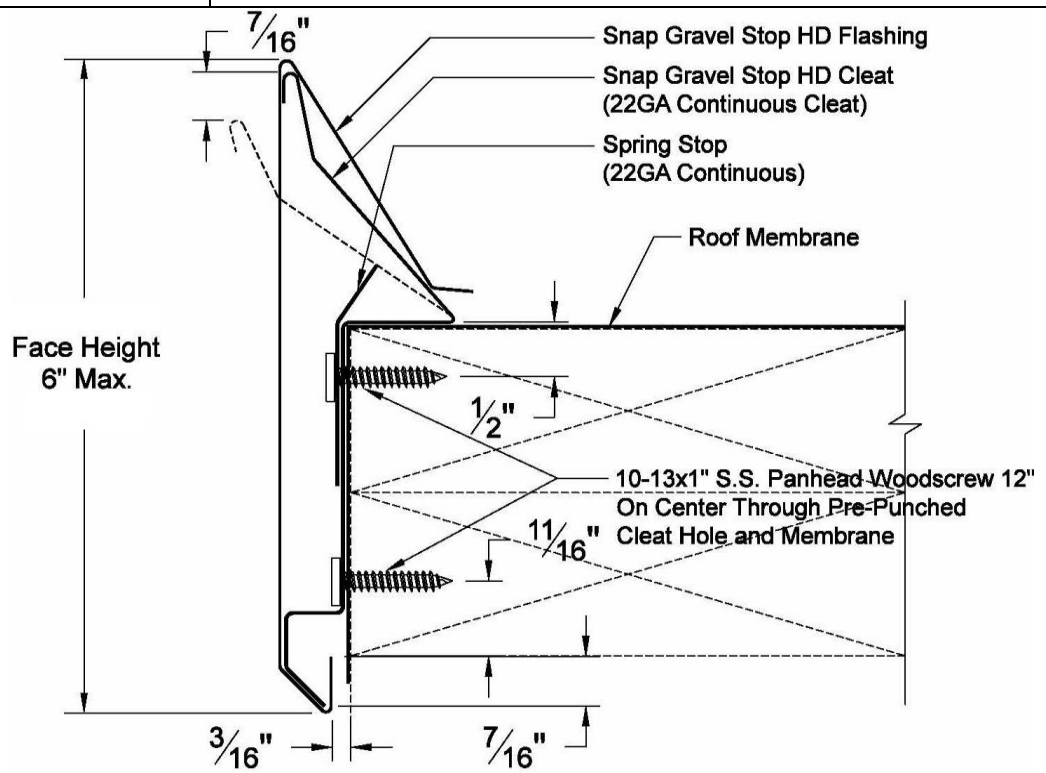

Maximum Roof Heights for Flat Roofs
Slopes ≤ 1.4:12

Exposure	Basic Wind Speed (mph)								
	120	130	140	150	160	170	180	190	200
Perimeter - Zone 4									
B	60 ft	60 ft	60 ft	60 ft	60 ft	60 ft	60 ft	60 ft	60 ft
C	60 ft	60 ft	60 ft	60 ft	60 ft	60 ft	60 ft	60 ft	60 ft
D	60 ft	60 ft	60 ft	60 ft	60 ft	60 ft	60 ft	60 ft	60 ft
Corner - Zone 5									
B	60 ft	60 ft	60 ft	60 ft	60 ft	60 ft	60 ft	60 ft	60 ft
C	60 ft	60 ft	60 ft	60 ft	60 ft	60 ft	60 ft	60 ft	40 ft
D	60 ft	60 ft	60 ft	60 ft	60 ft	60 ft	60 ft	30 ft	20 ft

Notes: 1) Exposure category for the structure location shall be as defined in the Florida Building Code 2) Limitations are based on the exposed area of $10ft^2$ or less 3) Topographic factors such as escarpments or hills are not included in the above assessment 4) Applicable for Enclosed Buildings without overhangs 5) NA = "Not Allowed" 6) K_d = 1.00; K_e = 1.00 7) Projects with roof heights greater than 60 ft shall be evaluated by a licensed design professional 8) V_{ult} is shown in the above table. Design pressures are calculated using $V_{asd} = V_{ult}\sqrt{0.6}$ per 1609.3.1.

This evaluation report is provided for State of Florida product approval under Rule 61G20-3. The manufacturer shall notify CREEK Technical Services, LLC of any product changes or quality assurance changes throughout the duration for which this report is valid. This evaluation report does not express nor imply warranty, installation, recommended use, or other product attributes that are not specifically addressed herein.

Snap Gravel Stop HD (Min. 24 ga. Steel)	
Substrate:	Min. No. 2 SPF wood lumber; Alternate substrates shall be evaluated by a licensed design professional.
Gravel Stop System:	Components shall be installed as shown below. The maximum fastener spacing shall be 12-inch o.c.
Maximum Design Pressure (*Pressure calculated using 2:1 margin of safety per 1504.9*)	
Horizontal load on front leg:	**-100 psf**

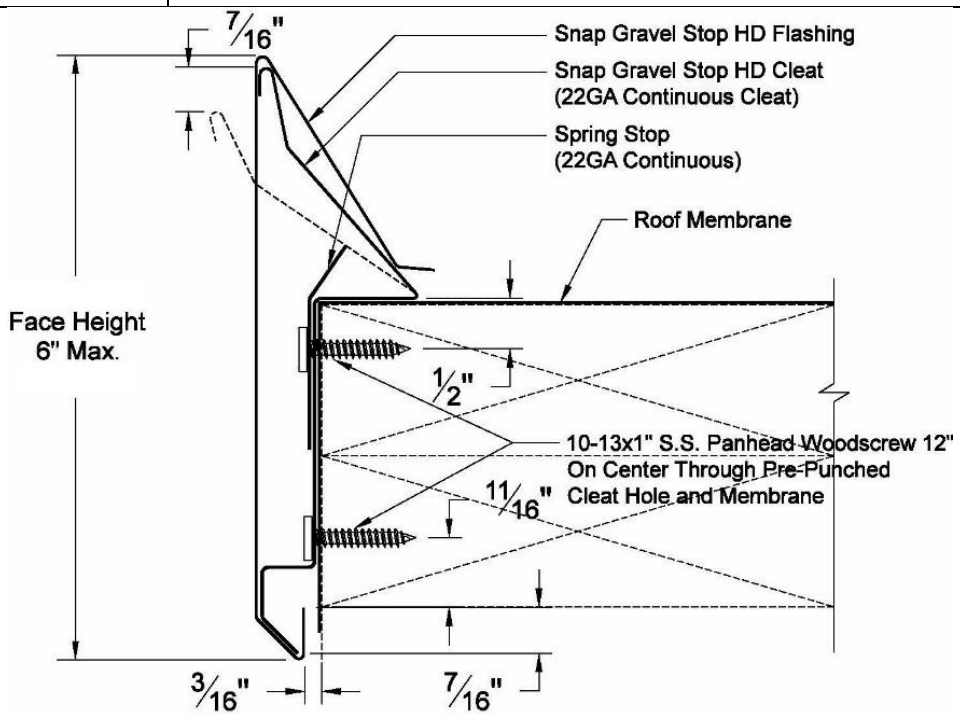

Maximum Roof Heights for Flat Roofs
Slopes ≤ 1.4:12

Exposure	Basic Wind Speed (mph)								
	120	130	140	150	160	170	180	190	200
Perimeter - Zone 4									
B	60 ft	60 ft	60 ft	60 ft	60 ft	60 ft	60 ft	60 ft	60 ft
C	60 ft	60 ft	60 ft	60 ft	60 ft	60 ft	60 ft	60 ft	60 ft
D	60 ft	60 ft	60 ft	60 ft	60 ft	60 ft	60 ft	60 ft	50 ft
Corner - Zone 5									
B	60 ft	60 ft	60 ft	60 ft	60 ft	60 ft	60 ft	60 ft	60 ft
C	60 ft	60 ft	60 ft	60 ft	60 ft	60 ft	60 ft	60 ft	30 ft
D	60 ft	60 ft	60 ft	60 ft	60 ft	60 ft	50 ft	25 ft	15 ft

Notes: 1) Exposure category for the structure location shall be as defined in the Florida Building Code 2) Limitations are based on the exposed area of $10ft^2$ or less 3) Topographic factors such as escarpments or hills are not included in the above assessment 4) Applicable for Enclosed Buildings without overhangs 5) NA = "Not Allowed" 6) K_d = 1.00; K_e = 1.00 7) Projects with roof heights greater than 60 ft shall be evaluated by a licensed design professional 8) V_{ult} is shown in the above table. Design pressures are calculated using $V_{asd} = V_{ult}\sqrt{0.6}$ per 1609.3.1.

This evaluation report is provided for State of Florida product approval under Rule 61G20-3. The manufacturer shall notify CREEK Technical Services, LLC of any product changes or quality assurance changes throughout the duration for which this report is valid. This evaluation report does not express nor imply warranty, installation, recommended use, or other product attributes that are not specifically addressed herein.

Snap Gravel Stop LT (Min. 0.040" Aluminum)	
Substrate:	Min. No. 2 SPF wood lumber; Alternate substrates shall be evaluated by a licensed design professional.
Gravel Stop System:	Components shall be installed as shown below. The maximum fastener spacing shall be 12-inch o.c.
Maximum Design Pressure (*Pressure calculated using 2:1 margin of safety per 1504.9*)	
Horizontal load on front leg:	**-45 psf**

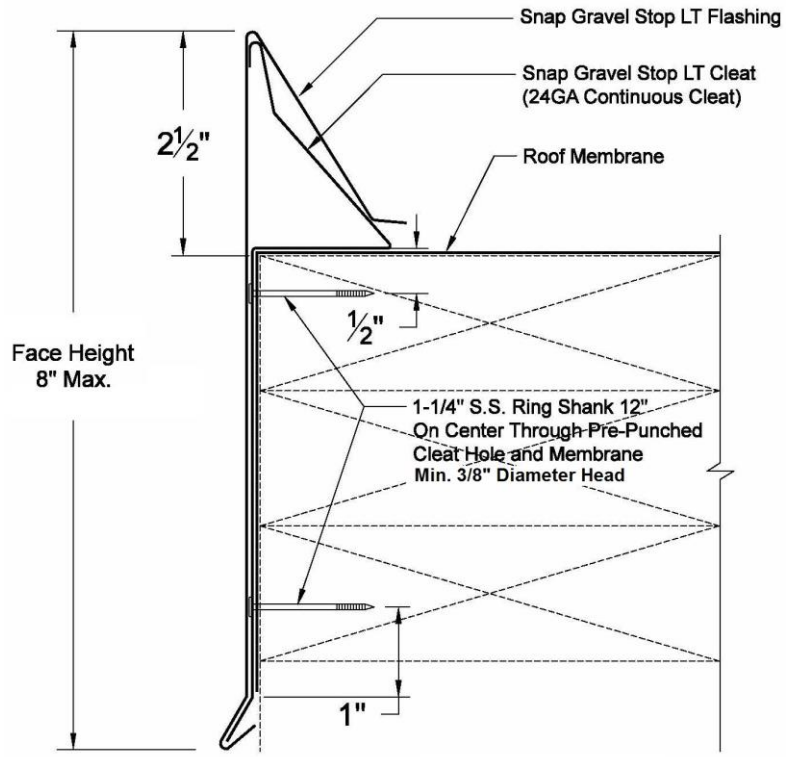

Maximum Roof Heights for Flat Roofs
Slopes ≤ 1.4:12

Exposure	Basic Wind Speed (mph)								
	120	130	140	150	160	170	180	190	200
Perimeter - Zone 4									
B	60 ft	60 ft	60 ft	60 ft	60 ft	40 ft	30 ft	NA	NA
C	60 ft	60 ft	60 ft	30 ft	15 ft	NA	NA	NA	NA
D	60 ft	60 ft	30 ft	NA	NA	NA	NA	NA	NA
Corner - Zone 5									
B	60 ft	60 ft	60 ft	50 ft	30 ft	NA	NA	NA	NA
C	60 ft	50 ft	25 ft	NA	NA	NA	NA	NA	NA
D	50 ft	20 ft	NA	NA	NA	NA	NA	NA	NA

Notes: 1) Exposure category for the structure location shall be as defined in the Florida Building Code 2) Limitations are based on the exposed area of $10ft^2$ or less 3) Topographic factors such as escarpments or hills are not included in the above assessment 4) Applicable for Enclosed Buildings without overhangs 5) NA = "Not Allowed" 6) K_d = 1.00; K_e = 1.00 7) Projects with roof heights greater than 60 ft shall be evaluated by a licensed design professional 8) V_{ult} is shown in the above table. Design pressures are calculated using $V_{asd} = V_{ult}\sqrt{0.6}$ per 1609.3.1.

This evaluation report is provided for State of Florida product approval under Rule 61G20-3. The manufacturer shall notify CREEK Technical Services, LLC of any product changes or quality assurance changes throughout the duration for which this report is valid. This evaluation report does not express nor imply warranty, installation, recommended use, or other product attributes that are not specifically addressed herein.

Snap Gravel Stop LT (Min. 24 ga. Steel)	
Substrate:	Min. No. 2 SPF wood lumber; Alternate substrates shall be evaluated by a licensed design professional.
Gravel Stop System:	Components shall be installed as shown below. The maximum fastener spacing shall be 12-inch o.c.
Maximum Design Pressure (*Pressure calculated using 2:1 margin of safety per 1504.9*)	
Horizontal load on front leg:	**-35 psf**

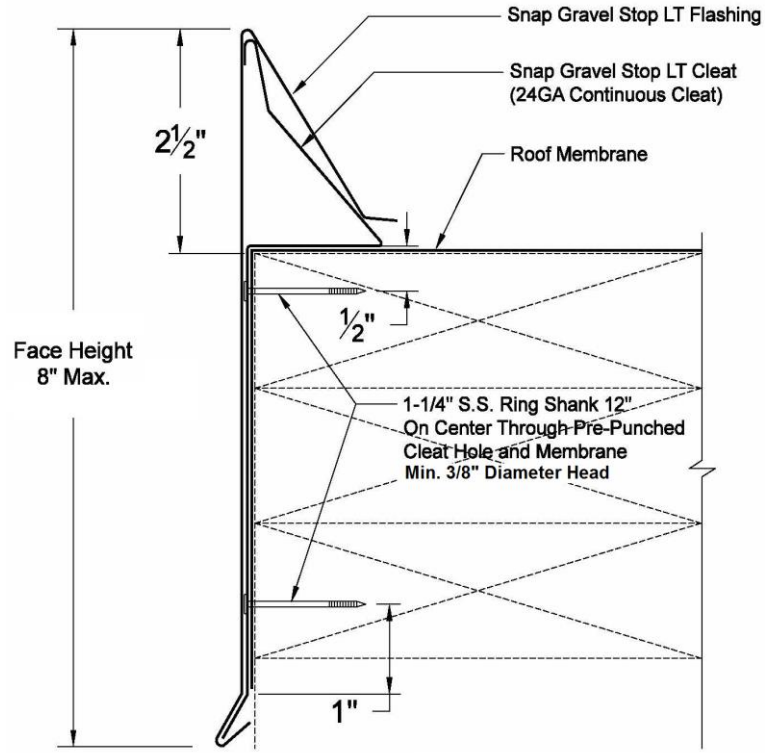

Maximum Roof Heights for Flat Roofs
Slopes ≤ 1.4:12

Exposure	Basic Wind Speed (mph)								
	120	130	140	150	160	170	180	190	200
Perimeter - Zone 4									
B	60 ft	60 ft	60 ft	40 ft	NA	NA	NA	NA	NA
C	60 ft	40 ft	20 ft	NA	NA	NA	NA	NA	NA
D	40 ft	15 ft	NA	NA	NA	NA	NA	NA	NA
Corner - Zone 5									
B	60 ft	60 ft	30 ft	NA	NA	NA	NA	NA	NA
C	30 ft	15 ft	NA	NA	NA	NA	NA	NA	NA
D	NA	NA	NA	NA	NA	NA	NA	NA	NA

Notes: 1) Exposure category for the structure location shall be as defined in the Florida Building Code 2) Limitations are based on the exposed area of $10ft^2$ or less 3) Topographic factors such as escarpments or hills are not included in the above assessment 4) Applicable for Enclosed Buildings without overhangs 5) NA = "Not Allowed" 6) K_d = 1.00; K_e = 1.00 7) Projects with roof heights greater than 60 ft shall be evaluated by a licensed design professional 8) V_{ult} is shown in the above table. Design pressures are calculated using $V_{asd} = V_{ult}\sqrt{0.6}$ per 1609.3.1.

This evaluation report is provided for State of Florida product approval under Rule 61G20-3. The manufacturer shall notify CREEK Technical Services, LLC of any product changes or quality assurance changes throughout the duration for which this report is valid. This evaluation report does not express nor imply warranty, installation, recommended use, or other product attributes that are not specifically addressed herein.

LIMITATIONS

1. This report is not for use in the HVHZ.
2. Fire classification is not within the scope of this evaluation.
3. Edge metal systems shall not be used on buildings with roof slopes greater than 2:12.
4. Installation of the evaluated products shall comply with this report, the FBC and the manufacturer's published application instructions. Where discrepancies exist between these sources, the more restrictive and FBC compliant installation detail shall prevail.
5. All products listed in this report shall be manufactured under a quality assurance program in compliance with Rule 61G20-3.

COMPLIANCE STATEMENT

The products evaluated herein by Zachary R. Priest, P.E. have demonstrated compliance with the Florida Building Code 8th Edition (2023) as evidenced in the referenced documents submitted by the named manufacturer.

This item has been digitally signed and sealed by Zachary R. Priest, PE, on 10/1/2023.

Printed copies of this document are not considered signed and sealed and the signature must be verified on any electronic copies.

Digitally signed by Zachary R. Priest

2023.10.01 15:36:21 -04'00'

Zachary R. Priest, P.E.
Florida Registration No. 74021
Organization No. ANE9641

CERTIFICATION OF INDEPENDENCE

CREEK Technical Services, LLC does not have, nor will it acquire, a financial interest in any company manufacturing or distributing products under this evaluation.

CREEK Technical Services, LLC is not owned, operated, or controlled by any company manufacturing or distributing products under this evaluation.
arc
Zachary R. Priest, P.E. does not have, nor will acquire, a financial interest in any company manufacturing or distributing products under this evaluation.

Zachary R. Priest, P.E. does not have, nor will acquire, a financial interest in any other entity involved in the approval process of the product.

END OF REPORT

This evaluation report is provided for State of Florida product approval under Rule 61G20-3. The manufacturer shall notify CREEK Technical Services, LLC of any product changes or quality assurance changes throughout the duration for which this report is valid. This evaluation report does not express nor imply warranty, installation, recommended use, or other product attributes that are not specifically addressed herein.